PUNJAB INDUSTRIAL ESTATES DEVELOPMENT AND MANAGEMENT COMPANY (PIEDMC)

Bidding Documents

For

"REHABLITATION OF AQUAFER WELLS AT SUNDAR INDUSTRIAL ESTATE"

ITB # PIE/P&C/AW/BOM-SIE/26/41

Volume-I: Bidding Documents

October, 2026

SUMMARY OF CONTENTS

Sr. No.	Subject	Page No
(I)	INVITATION FOR BIDS	03
(II)	INSTRUCTIONS TO BIDDERS & BIDDING DATA	05
(III)	BIDDING DATA	15
(IV)	FORM OF BID & SCHEDULES TO BID	39
(V)	STANDARD FORMS	50
(VI)	CONDITIONS OF CONTRACT & CONTRACT DATA	61
(VII)	TECHNICAL SPECIFICATIONS	141

INVITATION FOR BIDS

INVITATION FOR BIDS

Punjab Industrial Estates Development and Management Company (PIEDMC) is a company set up under section 42 of the Companies Act 2017, owned by the Government of the Punjab to facilitate and accelerate the industrial growth of Punjab, Pakistan.

1. PIEDMC intends to hire a Contractor for Rehabilitation of Aquafer Wells at Sundar Industrial Estate.

2. E- Bids are invited for the above said work from Contractors registered with PEC in category C-6 or above and specialized codes CE10 & CE09 (ii) having experience of similar works.

3. Bidding will be conducted under the provision of PPRA Rules -2014 (amended upto date) on single stage two envelope method.

4. Bidding Documents, containing detailed terms & conditions, can be downloaded from PPRA website: www.ppra.punjab.gov.pk, PIEDMC website www.pie.com.pk and Punjab e-Procurement System (eP) **i.e. https//ep.punjab.gov.pk** free of cost.

5. For E-bids submission on Punjab e-Procurement System (eP), Bidders are requested to register at **https//:** ep.punjab.gov.pk.

6. E- bids, duly completed, signed, stamped and in complete conformity with **Bidding Documents must be submitted on Punjab e-Procurement System (eP) i.e. https//:** ep.punjab.gov.pk **till 3rd November, 2026 by or before 03:00 PM and bids shall be opened at same date on 03:30 PM, as per the PPRA Rules, 2014 and no bid other than Punjab e-Procurement system (ep) will be accepted.**

7. Bid security amounting to **Rs. 399, 870/-** in favor of "PIEDMC" (which is 2% of the estimated cost) must be submitted online exclusively through the Bank of Punjab as per the guidelines of Punjab e-Procurement System (eP) / regulations. No physical financial instrument (CDR, Bank Guarantee, Pay Order, Bank Draft etc.) will be accepted.

8. The URL of the website of the PPRA is (http://punjab.eprocure.gov.pk) and response time shall be calculated exclusively from the date of publication of the advertisement on the website of the PPRA.

9. In case, the firm is found Black-listed by PIEDMC and PPRA or provide false / misleading information, it's bid will be cancelled and will be recommended for punitive action.

Note: PIEDMC management may reject all bids or proposals at any time prior to the acceptance of bids or proposals, as provided under Rule-35 of Punjab Procurement Rules, 2014 (amended from time to time)

Thanks & Best Regards

Chief Engineer (P&C)

INSTRUCTIONS
TO
BIDDERS

INSTRUCTIONS TO BIDDERS

TABLE OF CONTENTS

Clause No.	*Description*	*Page No.*
A. GENERAL		
IB.1	Scope of Bid	8
IB.2	Source of Funds	8
IB.3	Eligible Bidders	8
IB.4	One Bid Per Bidder	8
IB.5	Cost of Bidding	8
IB.6	Site Visit	8
B. BIDDING DOCUMENTS		
IB.7	Contents of Bidding Documents	9
IB.8	Clarification of Bidding Documents	9
IB.9	Amendment of Bidding Documents	9
C. Preparation of Bids		
IB.10	Language of Bid	10
IB.11	Documents Comprising the Bid	10
IB.12	Bid Prices	11
IB.13	Currencies of Bid and Payment	11
IB.14	Bid Validity	11
IB.15	Bid Security	12
IB.16	Alternate Proposals by Bidder	12
IB.17	Pre-Bid Meeting	12
IB.18	Format and Signing of Bid	13
D. Submission of Bids for Single Stage Two Envelope Bidding Procedure		
IB.19	Sealing and Marking of Bids	13
IB.20	Deadline for Submission of Bids	14
IB.21	Late Bids	14
IB.22	Modification, Substitution and Withdrawal of Bids	14
E. Bid Opening and Evaluation for Single Stage Two Envelope Bidding Procedure		
IB.23	Bid Opening	14
IB.24	Process to be Confidential	16
IB.25	Clarification of Bids	16
IB.26	Examination of Bids and Determination of Responsiveness	17
IB.27	Correction of Errors	17

IB.28	Evaluation and Comparison of Bids	17
F. Award of Contract		
IB.29	Award	18
IB.30	Employer's Right to Accept any Bid and to Reject any or all Bids	18
IB.31	Notification of Award	18
IB.32	Performance Security	18
IB.33	Signing of Contract Agreement	19
IB.34	General Performance of the bidders	19
IB.35	Integrity Pact	19
IB.36	Instructions not Part of Contract	19

INSTRUCTIONS TO BIDDERS

A. GENERAL

IB.1 Scope of Bid

1.1 The Employer as defined in the Bid data sheet hereinafter called "the Employer" wishes to receive bids for the construction and completion of works and remedying any defects therein as described in these Bidding Documents, and summarized in the Bid data sheet hereinafter referred to as the "Works".

1.2 The successful bidder will be expected to complete the Works within the time specified in Appendix-A to Bid.

.

IB.2 Source of Funds

The Employer has arranged funds from its own sources.

IB.3 Eligible Bidders

3.1 This Invitation for Bids is open to all bidders meeting the following requirements:

a) Duly licensed by the Pakistan Engineering Council (PEC) in the category of C-6 or above with specialized codes CE-10 & CE-09 (ii) for value of Works. (Copy of the valid certificate to be attached)

b) A Bidder shall have the nationality of Islamic Republic of Pakistan. A Bidder shall be deemed to have the nationality of Pakistan if the Bidder is constituted, incorporated and operates in conformity with the provisions of the laws of Pakistan.

c) A Bidder must be on Active Taxpayer List of the Federal Board of Revenue and Punjab Revenue Authority at the time of submission of its Bid.

d) In case, the firm is found Black-listed by PIEDMC & PPRA or provide false / misleading information, it's Bid will be cancelled and will be recommended for punitive action.

e) A Bidder shall not have a conflict of interest. A Bidder found to have a conflict of interest shall be non-responsive.

f) The Bidder who has previously worked with the Employer i-e PIEDMC, BOM-SIE, BOM-QIE and BOM-MIE must submit satisfactory Performance Certificate for contracts that have been completed under PIEDMC, BOM-SIE, BOM-QIE and BOM-MIE. Failure to provide this certificate will result in rejection of the bid submitted by the bidder, as non-responsive.

IB.4 One Bid per Bidder

4.1 Each bidder shall submit only one bid either by himself, or as a partner in a joint venture. A bidder who participates in more than one bid (other than alternatives pursuant to Clause IB.16) will be disqualified.

IB.5 Cost of Bidding

5.1 The bidders shall bear all costs associated with the preparation and submission of their respective bids and the Employer will in no case be responsible or liable for those costs, regardless of the conduct or outcome of the bidding process.

IB.6 Site Visit

6.1 The bidders are advised to visit and examine the Site of Works and its surroundings and obtain for themselves on their own responsibility all information that may be necessary for preparing the bid and entering into a contract for construction of the Works. All cost in this respect shall be at the bidder's own expense.

6.2 The bidders and any of their personnel or agents will be granted permission by the Employer to enter upon his premises and lands for the purpose of such inspection, but only upon the express condition that the bidders, their personnel and agents, will release and indemnify the Employer, his personnel and agents from and against all liability in respect thereof and will be responsible for death or personal injury, loss of or damage to property and any other loss, damage, costs and expenses incurred as a result of such inspection.

B. BIDDING DOCUMENTS

IB.7 Contents of Bidding Documents

7.1 The Bidding Documents, in addition to invitation for bids, are those stated below and should be read in conjunction with any Addenda issued in accordance with Clause IB.9.

1. Instructions to Bidders.
2. Bid data sheet.
3. General Conditions of Contract, Part-I(GCC).
4. Special Conditions of Contract, Part-II(SCC).
5. Specifications – Special Provisions.
6. Specifications – Technical Provisions.
7. Form of Bid & Appendices to Bid, including a Certificate that the bidder is not currently blacklisted by the Procuring Agency.
8. Bill of Quantities (Appendix-D to Bid).
9. Form of Bid Security.
10. Form of Contract Agreement.
11. **Forms of Performance Security, Mobilization Advance, Bank Guarantee and Secured Advance.**
12. Drawings.

7.2 The bidders are expected to examine carefully the contents of all the above documents. Failure to comply with the requirements of bid submission will be at the Bidder's own risk. Pursuant to Clause IB.26, bids which are not substantially responsive to the requirements of the Bidding Documents will be rejected.

IB.8 Clarification of Bidding Documents

8.1 A prospective bidder requiring any clarification(s) in respect of the Bidding Documents may notify **through Punjab e-Procurement System (eP)**.

IB.9 Amendment of Bidding Documents

9.1 At any time prior to the deadline for submission of Bids, the Employer may, for any reason, whether at his own initiative or in response to a clarification requested by a prospective bidder, modify the Bidding Documents by issuing addendum.

9.2 Any addendum thus issued shall be part of the Bidding Documents pursuant to Sub-Clause 6.1 hereof, and shall be communicated in writing to all purchasers of the Bidding Documents. Prospective bidders shall acknowledge receipt of each addendum in writing to the Employer.

9.3 To afford prospective bidders reasonable time in which to take an addendum into account in preparing their Bids, the Employer may at its discretion extend the deadline for submission of Bids.

C. PREPARATION OF BIDS

IB.10 Language of Bid

10.1 The bid prepared by the bidder and all correspondence and documents relating to the Bid, exchanged by the bidder and the Employer shall be written in the English language, provided that any printed literature furnished by the bidder may be written in another language so long as accompanied by an English translation of its pertinent passages in which case, for purposes of interpretation of the Bid, the English translation shall govern.

IB.11 Documents Comprising the Bid

11.1 The Bid shall comprise two documents submitted simultaneously on Punjab e-Procurement System (eP), one called the Technical Bid and the other the Financial Bid.

11.2 Bids submitted by a JV shall include a copy of the Joint Venture Agreement entered into by all partners. Alternatively, a Letter of Intent to execute a Joint Venture Agreement in the event of a successful bid shall be signed by all partners and submitted with the bid, together with a copy of the proposed agreement. The role to be played by each partner to be specified therein**; and, the concerned partner should have the requisite qualification/ experience to successfully execute the assigned task.** Bids submitted by a joint venture of two (2) or more firms shall also comply with the following requirements:

(a) In case of a successful bid, the Form of JV Agreement shall be signed so as to be legally binding on all partners within 7 days of the receipt of letter of acceptance failing which the contract and the letter of acceptance shall stand void and redundant.

(b) One of the joint venture partners shall be nominated as being in charge/ lead partner; and this authorization shall be evidenced by submitting a power of attorney signed by legally authorized signatories of all the joint venture partners;

(c) The partner-in-charge/ lead partner shall always be duly authorized to deal with the Employer regarding all matters related with and/or incidental to the execution of Works as per the terms and Conditions of JV Agreement and in this regard to incur any and all liabilities, receive instructions, give binding undertakings and receive payments on behalf of the joint venture;

(d) All partners of the joint venture shall at all times and under all circumstances be liable jointly and severally for the execution of the Contract in accordance with the Contract terms; and, a statement to this effect shall be included in the authorization mentioned under Sub-Para (b) above as well as in the Form of Bid and in the Form of JV Agreement (in case of a successful bid); and

(e) A copy of JV agreement shall be submitted before signing of the Contract, stating the conditions under which JV will function, its period of duration, the persons authorized to represent and obligate it and which persons will be directly responsible for due performance of the Contract and can give valid receipts on behalf of the joint venture, the proportionate participation of the several firms forming the joint venture, and any other information necessary to permit a full appraisal of its functioning. The JV Agreement shall be made part of the contract. No amendments / modifications whatsoever in the joint venture agreement shall be agreed to between the joint venture

partners without prior written consent of the Employer.

11.3 The Bidder shall furnish, as part of the Technical Bid, a Technical Proposal including a statement of work methods, equipment, personnel, schedule, **qualification/ experience required to successfully execute the individually assigned tasks** and any other information as stipulated in Bidding Forms, in sufficient detail to demonstrate the adequacy of the Bidders' proposal to meet the work requirements and the completion time referred to in Sub-Clause 1.2 hereof.

IB.12 Bid Prices

12.1 Unless stated otherwise in the Bidding Documents, the Contract shall be for the whole of the Works as described in IB 1.1 hereof, based on the unit rates and / or prices submitted by the bidder.

12.2 The bidders shall fill in rates and prices for all items of the Works described in the Bill of Quantities. Items against which no rate or price is entered by a bidder will not be paid for by the Employer when executed and shall be deemed covered by rates and prices for other items in the Bill of Quantities.

12.3 All duties, taxes and other levies payable by the Contractor under the Contract, or for any other cause, as on the date **of opening of the bids** shall be included in the rates and prices and the total Bid Price submitted by a bidder.

Additional / reduced duties, taxes and levies due to subsequent additions or changes in legislation shall be reimbursed / deducted as per Sub-Clause 70.2 of the General Conditions of Contract Part-I.

12.4 The rates and prices quoted by the bidders are subject to adjustment during the performance of the Contract in accordance with the provisions of Clause 70 of the Conditions of Contract. The bidders shall furnish the prescribed information for the price adjustment formulae in Appendix C to Bid and shall submit with the bids such other supporting information as required under the said clause.

IB.13 Currencies of Bid and Payment

13.1 The unit rates and the prices shall be quoted by the bidder entirely in Pak rupees. A bidder expecting to incur expenditures in other currencies for inputs to the Works supplied from outside the Employer's country (referred to as the "Foreign Currency Requirements") shall indicate the same in Appendix-B to Bid. However, subject to GCC clause 71.1, payments in foreign currency are not permissible.

13.2 The rates of exchange to be used by the bidder for currency conversion shall be the TT & OD Selling Rates published or authorized by the State Bank of Pakistan prevailing on the date **of opening of the bids.** For the purpose of payments, the exchange rates used in bid preparation shall apply for the duration of the Contract. Rule 32(2) of PPR-14 shall be applicable for rate of exchange of foreign currencies.

IB.14 Bid Validity

14.1 Bids shall remain valid for the period stipulated in the Bid data sheet after the Date of Bid Opening specified in Clause IB.23.

14.2 In exceptional circumstances, prior to expiry of the original bid validity period, the Employer may request that the bidders extend the period of validity for a specified additional period which shall in no case be more than the original bid validity period or 180 days whichever is more. The request and the responses thereto shall be made in writing. A bidder may refuse the request without forfeiting his Bid Security. A bidder agreeing to the request will not be required

or permitted to modify his bid, but will be required to extend the validity of his Bid Security for the period of the extension, and in compliance with Clause IB.15 in all respects. Rule 28 of PPR-14 shall be applicable for Bid Validity period.

IB.15 Bid Security

15.1 Each bidder shall furnish, as part of his bid, a Bid Security in the amount stipulated in the Bid data sheet in Pak Rupees or an equivalent amount in a freely convertible currency.

15.2 The Bid Security shall be, at the option of the bidder, in the form of Deposit at Call or a Bank Guarantee issued by a Scheduled Bank in Pakistan or from a foreign bank duly counter guaranteed by a Scheduled Bank in Pakistan in favor of the Employer valid for a period 30 days beyond the Bid Validity date.

15.3 Any bid not accompanied by an acceptable Bid Security shall be rejected by the Employer as non-responsive.

15.4 The bid securities of unsuccessful bidders will be returned as promptly as possible, after expiry of grievance period or disposal of complaint if any, complying with the relevant provisions of PPR-14.

15.5 The Bid Security of the successful bidder will be returned when the bidder has furnished the required Performance Security and signed the Contract Agreement.

15.6 The Bid Security may be forfeited:

(a) If the bidder withdraws his bid except as provided in IB 22.1;

(b) If the bidder does not accept the correction of his Bid Price pursuant to IB 27.2 hereof; or

(c) In the case of successful bidder, if he fails within the specified time limit to:

(i) Furnish the required Performance Security;

(ii) Sign the Contract Agreement, or

(iii) Furnish the required JV agreement within 7 days of the receipt of letter of acceptance.

IB.16 Alternate Proposals by Bidder

16.1 No alternate proposals are allowed in single stage two envelope method.

IB.17 Pre-Bid Meeting

17.1 The Employer may, on his own motion or at the request of any prospective bidder(s), hold a pre-bid meeting to clarify issues and to answer any questions on matters related to the Bidding Documents. The date, time and venue of pre-bid meeting, if convened, is as stipulated in the Bid data sheet. All prospective bidders or their authorized representatives shall be invited to attend such a pre-bid meeting.

17.2 The bidders are requested to submit questions, if any, in writing so as to reach the Employer not later than seven (7) days before the proposed pre-bid meeting.

17.3 Minutes of the pre-bid meeting, including the text of the questions raised and the replies given, will be transmitted without delay to all purchasers of the Bidding Documents. Any modification of the Bidding Documents listed in IB 7.1 hereof, which may become necessary as a result of the pre-bid meeting shall be made by the Employer exclusively through the issue of an Addendum pursuant to Clause IB.9 and not through the minutes of the pre-bid meeting.

17.4 Absence at the pre-bid meeting will not be a cause for disqualification of a bidder.

IB.18 Format and Signing of Bid

18.1 Bidders are particularly directed that the amount entered on the Letter of Financial Bid shall

be for performing the Contract strictly in accordance with the Bidding Documents.

18.2 All appendices to Bid are to be properly completed and signed.

18.3 No alteration is to be made in the Financial Bids and Technical Bids nor in the Appendices thereto except in filling up the blanks as directed. If any such alterations be made or if these instructions be not fully complied with, the bid may be rejected.

D. SUBMISSION OF BIDS FOR SINGLE STAGE TWO ENVELOPE BIDDING PROCEDURE

IB.19 Sealing and Marking of Bids

19.1 Each bidder shall submit his bid as under:

(a) Bid duly signed & stamp shall be uploaded on Punjab e-Procurement System (eP).

IB.20 Deadline for Submission of Bids

20.1 (a) Date and time as given on Punjab e-procurement System (eP)

IB.22 Modification, Substitution and Withdrawal of Bids

22.1 Any bidder may modify**,** substitute or withdraw his bid after bid submission provided that the modification, substitution or written notice of withdrawal is received by the Employer prior to the deadline for submission of bids.

22.2 The modification, substitution, or notice for withdrawal of any bid shall be prepared, sealed, marked and delivered in accordance with the provisions of Clause IB.19 with the outer and inner envelopes additionally marked “MODIFICATION”, “SUBSTITUTION” or “WITHDRAWAL” as appropriate.

22.3 No bid may be modified by a bidder after the deadline for submission of bids except in accordance with IB 22.1 and 27.2.

22.4 Withdrawal of a bid during the interval between the deadline for submission of bids and the expiration of the period of bid validity specified in the Form of Bid may result in forfeiture of the Bid Security in pursuance to Clause IB.15.

E BID OPENING AND EVALUATION FOR SINGLE STAGE TWO ENVELOPE BIDDING PROCEDUR

IB. 23 Bid Opening

23.1 The Employer will open the Technical Bids in public at the address, date and time specified in the Bid data sheet in the presence of Bidders` designated representatives and anyone who choose to attend. The Financial Bids will remain unopened and will be held in custody of the Employer until the specified time of their opening.

23.2 First, envelopes marked “WITHDRAWAL” shall be opened and read out and the envelope with the corresponding bid shall not be opened, but returned to the Bidder. No bid withdrawal shall be permitted unless the corresponding Withdrawal Notice contains a valid authorization to request the withdrawal and is read out at bid opening.

23.3 Second, outer envelopes marked “SUBSTITUTION” shall be opened. The inner envelopes containing the Substitution Technical Bid and/or Substitution Financial Bid shall be exchanged for the corresponding envelopes being substituted, which are to be returned to the Bidder unopened. Only the Substitution Technical Bid, if any, shall be opened, read out, and recorded. Substitution Financial Bid will remain unopened in accordance with IB 23.1. No envelope shall be substituted unless the corresponding

Substitution Notice contains a valid authorization to request the substitution and is read out

and recorded at bid opening.

23.4 Next, outer envelopes marked "MODIFICATION" shall be opened. No Technical Bid and/or Financial Bid shall be modified unless the corresponding Modification Notice contains a valid authorization to request the modification and is read out and recorded at the opening of Technical Bids. Only the Technical Bids, both Original as well as Modification, are to be opened, read out, and recorded at the opening. Financial Bids, both Original and Modification, will remain unopened in accordance with IB 23.1. The Bidders' representatives who are present shall be requested to sign the record. The omission of a Bidder's signature on the record shall not invalidate the contents and effect of the record. A copy of the record shall be distributed to all Bidders.

23.5 Other envelopes holding the Technical Bids shall be opened one at a time, and the following read out and recorded:

(a) the name of the Bidder;

(b) whether there is a modification or substitution;

(c) the presence of a Bid Security, if required; and

(d) Any other details as the Employer may consider appropriate.

No Bid shall be rejected at the opening of Technical Bids except for late bids, in accordance with IB 21.1. Only Technical Bids read out and recorded at bid opening, shall be considered for evaluation.

Preliminary Examination of Technical Bids

23.6 a) The Employer shall first examine qualification and experience Data as per appendix M and N submitted by the Bidder. The technical proposal examination of those bidders only shall be taken in hand who meet the minimum requirement as mentioned in appendix M and N. Only substantially responsive qualification shall be considered for further evaluation.

b) The Employer shall examine the Technical Bid to confirm that all the documents have been provided, and to determine the completeness of each document submitted.

23.7 The Employer shall confirm that all the documents and information have been provided for evaluation of Technical bid as required under these bidding documents.

23.8 At the end of the evaluation of the Technical Bids, the Employer will invite only those bidders who have submitted substantially responsive Technical Bids and who have been determined as being qualified for award to attend the opening of the Financial Bids.

The date, time, and location of the opening of Financial Bids will be advised in writing by the Employer. Bidders shall be given reasonable notice for the opening of Financial Bids.

23.9 The Employer will notify Bidders in writing who have been rejected on the grounds of their Technical Bids being substantially non-responsive to the requirements of the Bidding Document and return their Financial Bids unopened as per rule 38(2)(a)(vii) of PPR-14.

23.10 The Employer shall conduct the opening of Financial Bids of all Bidders who submitted substantially responsive Technical Bids, publically in the presence of Bidders` representatives who choose to attend at the address, date and time specified by the Employer. The Bidder's representatives who are present shall be requested to sign a register evidencing their attendance.

23.11 All envelopes containing Financial Bids shall be opened one at a time and the following read out and recorded:

a) The name of the Bidder;

b) Whether there is a modification or substitution;

c) The Bid Prices, including any discounts; and

d) Any other details as the Employer may consider appropriate.

Only Financial Bids and discounts, read out and recorded during the opening of Financial Bids shall be considered for evaluation. No Bid shall be rejected at the opening of Financial Bids.

23.12 If this Bidding Document allows Bidders to quote separate prices for different contracts, and the award to a single Bidder of multiple contracts, the methodology to determine the lowest evaluated price of the contract combinations is that which is most economical to the Employer.

IB.24 Process to be Confidential

24.1 Information relating to the examination, clarification, evaluation and comparison of bid and recommendations for the award of a contract shall not be disclosed to bidders or any other person not officially concerned with such process before the announcement of final bid evaluation report which shall be done at least 10 days prior to the award of Contract. The announcement to all Bidders will include table(s) comprising read out prices, discounted prices, price adjustments made (if applicable), final evaluated prices and recommendations against all the bids evaluated. Any effort by a bidder to influence the Employer's processing of bids or award decisions may result in the rejection of such bidder's bid. Whereas any bidder feeling aggrieved may lodge a written complaint not later than ten 10 days after the announcement of Technical and Financial Bids. No bidder will be allowed to file grievance petition w.r.t. Technical Evaluation after announcement/ uploading of Financial Evaluation Report. However mere fact of lodging a complaint shall not warrant suspension of the procurement process.

IB.25 Clarification of Bids

25.1 To assist in the examination, evaluation and comparison of bids, the Employer may, at his discretion, ask any bidder for clarification of his bid, including breakdowns of unit rates. The request for clarification and the response shall be in writing but no change in the price or substance of the bid shall be sought, offered or permitted except as required to confirm the correction of arithmetic errors discovered by the Employer in the evaluation of the bids in accordance with Clause IB.28.

25.2 If a Bidder does not provide clarifications of its Bid by the date and time set in the Employer's request for clarification, its bid may be rejected. Rule 33 of PPR-14 shall be applicable for clarifications.

IB.26 Examination of Bids and Determination of Responsiveness

26.1 Prior to the detailed evaluation of bids, the Employer will determine whether each bid is substantially responsive to the requirements of the Bidding Documents.

26.2 A substantially responsive bid is one which (i) meets the eligibility criteria; (ii) has been properly signed; (iii) is accompanied by the required Bid Security; (iv) Includes signed Integrity Pact where required as per clause IB.35; and (v) conforms to all the terms, conditions and specifications of the Bidding Documents, without material deviation or reservation (vi) meets the qualification criteria as specified in Appendix-M & N. A material deviation or reservation is one (i) which affect in any substantial way the scope, quality or performance of the Works; (ii) which limits in any substantial way, inconsistent with the Bidding Documents, the Employer's rights or the bidder's obligations under the Contract; (iii) adoption/rectification whereof would affect unfairly the competitive position of other bidders presenting substantially

responsive bids. Only substantially responsive bid shall be considered for further evaluation.

26.3 If a bid is not substantially responsive, it may not subsequently be made responsive by correction or withdrawal of the non-conforming material deviation or reservation. The Employer may, however, seek confirmation/ clarification in writing which shall be responded in writing.

IB.27 Correction of Errors

27.1 Bids determined to be substantially responsive will be checked by the Employer for any arithmetic errors. Errors will be corrected by the Employer as follows:

(a) Where there is a discrepancy between the amounts in figures and in words, the amount in words will govern; and

(b) Where there is a discrepancy between the unit rate and the line item total resulting from multiplying the unit rate by the quantity, the unit rate as quoted will govern, unless in the opinion of the Employer there is an obviously gross misplacement of the decimal point in the unit rate, in which case the line item total as quoted will govern and the unit rate will be corrected.

27.2 The amount stated in the Letter of Financial Bid will be adjusted by the Employer in accordance with the above procedure for the correction of errors and with the concurrence of the bidder, shall be considered as binding upon the bidder. If the bidder does not accept the corrected Bid Price, his Bid will be rejected, and the Bid Security shall be forfeited in accordance with IB.15.6 (b) hereof.

IB.28 Evaluation and Comparison of Bids

28.1 The Employer will evaluate and compare only the Bids determined to be substantially responsive in accordance with Clause IB.26.

28.2 In evaluating the Bids, the Employer will determine for each Bid the evaluated Bid Price by adjusting the Bid Price as follows:

(a) Making any correction for errors pursuant to Clause IB.27;

(b) Excluding Provisional Sums and the provision, if any, for contingencies in the Summary Bill of Quantities, but including competitively priced Day work; and

(c) Making an appropriate adjustment for any other acceptable variation or deviation.

28.3 The estimated effect of the price adjustment provisions of the Conditions of Contract, applied over the period of execution of the Contract, shall not be taken into account in Bid evaluation.

28.4 If the Bid of the successful bidder is seriously unbalanced in relation to the Employer's estimate of the cost of work to be performed under the Contract, the Employer may require the bidder to produce detailed price analyses for any or all items of the Bill of Quantities to demonstrate the internal consistency of those prices with the construction methods and schedule proposed. After evaluation of the price analyses, the Employer may require that the amount of the Performance Security set forth in Clause IB.32 be increased at the expense of the successful bidder to a level sufficient to protect the Employer against financial loss in the event of default of the successful bidder under the Contract.

F. AWARD OF CONTRACT

IB.29 Award

29.1 Subject to Clauses IB.30 and IB.34, the Employer will award the Contract to the bidder whose bid has been determined to be substantially responsive to the Bidding Documents and who has offered the lowest evaluated Bid Price, provided that such bidder has been determined to be eligible in accordance with the provisions of Clause IB.3 and qualify pursuant to IB 29.2.

29.2 The Employer, at any stage of the bid evaluation, having credible reasons for or prima facie evidence of any defect in bidder's capacities, may require the bidders to provide information concerning their professional, technical, financial, legal or managerial competence whether already pre-qualified or not:

Provided that such qualification shall only be laid down after recording reasons in writing. They shall form part of the records of that bid evaluation report.

IB.30 Employer's Right to Accept any Bid and to Reject any or all Bids

30.1 Notwithstanding Clause IB.29, the Employer reserves the right to accept or reject any Bid by giving reasons, and to annul the bidding process and reject all bids, at any time prior to the acceptance of any bid or proposal, without thereby incurring any liability to the affected bidders or any obligation except that the grounds for rejection of all bids shall upon request be communicated to any bidder who submitted a bid, without justification of grounds. Rejection of all bids shall be notified to all bidders promptly.

IB.31 Notification of Award

31.1 Prior to expiration of the period of bid validity prescribed by the Employer, the Employer will notify the successful bidder in writing ("Letter of Acceptance") that his Bid has been accepted. This letter shall name the sum which the Employer will pay the Contractor in consideration of the execution and completion of the Works by the Contractor as prescribed by the Contract (hereinafter and in the Conditions of Contract called the "Contract Price").

31.2 No Negotiation with the bidder having evaluated as lowest responsive or any other bidder shall be permitted. However, the lowest evaluated bidder may further reduce the Bid Price voluntarily without compromising the quality/ quantity.

31.3 The notification of award and its acceptance by the bidder will constitute the formation of the Contract, binding the Employer and the bidder till signing of the formal Contract Agreement.

31.4 Upon furnishing by the successful bidder of a Performance Security, the Employer will promptly notify the other bidders that their Bids have been unsuccessful and return their bid securities. No bid security can be returned without exhausting the grievance period or without finally disposing off the complaint of the non-responsive bidder. However, bid security may be returned earlier if any bidder submits affidavit that he is satisfied with the proceedings and hence his bid security may be returned.

IB.32 Performance Security

32.1 The successful bidder shall furnish to the Employer a Performance Security in the form and the amount stipulated in the Bid data sheet and the Conditions of Contract within a period of 14 days after the receipt of Letter of Acceptance. On submission of Performance Security, the bid security of the successful bidder may be returned.

32.2 Failure of the successful bidder to comply with the requirements of IB.32.1 or IB.33 or IB.35 shall constitute sufficient grounds for the annulment of the award and forfeiture of the Bid Security. Rule 56 of PPR-14 shall be applicable for performance Security.

IB.33 Signing of Contract Agreement

33.1 Within 14 days from the date of furnishing of acceptable Performance Security under the Conditions of Contract, the Employer will send the successful bidder the Contract Agreement in the form provided in the Bidding Documents, incorporating all agreements between the parties.

33.2 The formal Agreement between the Employer and the successful bidder shall be executed within 14 days of the receipt of the Contract Agreement by the successful bidder from the Employer.

IB. 34 General Performance of the Bidders

The Employer reserves the right to obtain information regarding performance of the bidders on their previously awarded contracts/works. The Employer may in case of consistent poor performance of any Bidder as reported by the employers of the previously awarded contracts, interalia, reject his bid and/or refer the case to the concerned forum(s). Upon such reference, the concerned forum(s) in accordance with its rules, procedures and relevant laws of the land take such action as may be deemed appropriate under the circumstances of the case including black listing of such Bidder and debarring him from participation in future bidding for similar works.

IB.35 Integrity Pact

The Bidder shall sign and stamp the Integrity Pact provided at Appendix-L to Bid in the Bidding Documents for all procurement contracts exceeding Rupees ten Million. Failure to provide such Integrity Pact shall make the bidder non-responsive.

IB.36 Instructions not Part of Contract

Bids shall be prepared and submitted in accordance with these Instructions which are provided to assist bidders in preparing their bids, and do not constitute part of the Bid or the Contract Documents. Submission of Bids shall be construed as evidence that the bidder has admitted all provisions of the Instruction to the Bidders.

IB.37 PPRA Act, 2009 and PPR-14 will have over-riding effect

PPRA Act, 2009 and PPR-14 as amended up to date will supersede and will have an over-riding effect in case in case of any contradiction with these Instructions, the Contract or any other part of the Bidding Documents.

BIDDING DATA

Reference to Instructions to Bidders	**Bidding Data**
IB.1 1.1	**Scope of Bid** REHABILITATION OF AQUAFER WELLS AT SUNDAR INDUSTRIAL ESTATE Name and Address of the Employer Punjab Industrial Estates Development & Management Company (PIEDMC) Attention: Chief Executive Officer (CEO) Commercial Area (North), Sundar Industrial Estates, Sundar-Raiwind Road, Lahore Tel: 042-35297203-6 Fax: 042-35297207 **Executing Agency:** Board of Management, Sundar Industrial Estates Gate no 02, Sundar-Raiwind Road, Lahore Tel: 042-35297291-3 Email Info@sie.com.pk,
IB.2 2.1	**Source of Funds** All payments shall be made in Pak Rupees through Employer's own resources.
IB.3 3.1	**Eligible Bidders** This invitation to Bids is open to all Bidders meeting the following requirements: (a) A Bidder shall have the nationality of Islamic Republic of Pakistan. A Bidder shall be deemed to have the nationality of Pakistan if the Bidder is constituted, incorporated and operates in conformity with the provisions of the laws of Pakistan. (b) A Bidder shall be duly licensed by the Pakistan Engineering Council (PEC) in the C-6 category or above with specialized codes CE10 & CE-09 (ii). **In case of Joint Venture (JV), JV of any kind is not allowed to participate in the bid**

Reference to Instructions to Bidders	**Bidding Data**
	(c) A Bidder shall be registered with Income Tax Department and must be on Active Taxpayer List of the Federal Board of Revenue at the time of submission of its Bid. (d) A Bidder shall not be eligible to participate in this bidding process while under temporary suspension or debarment/blacklisting by PIEDMC and PPRA (whether notified or not by Punjab Procurement Regulatory Authority (PPRA) on its website). (e) Bidders shall not have a conflict of interest. All Bidders found to have a conflict of interest shall be disqualified. Bidders may be considered to be in a conflict of interest with one or more parties in the bidding process, if any of the following apply: (i) A Bidder participates in more than one Bids in this bidding process, either individually or as a partner in a joint venture. This will result in the disqualification of all Bids in which the Bidder has participated; (ii) Two or more Bidders partially or wholly owned or directed by common individuals, regardless of extent of their shares or interest shall not be eligible to participate in the bidding process. Either only one such Bidder may participate or such Bidders may form a joint venture to participate as one venture; and (iii) A Bidder or its affiliated entity, participated as a consultant in the preparation of the design or technical specifications of the works that are the subject of this bidding process. (f) Bidders shall provide such evidence of their continued eligibility satisfactory to the Employer, as the Employer shall reasonably request (g) The Bidder who has previously worked with the Employer i-e PIEDMC, BOM-SIE, BOM-QIE and BOM-MIE must submit satisfactory Performance Certificate for contracts that have been completed under PIEDMC, BOM-SIE, BOM-QIE and BOM-MIE. Failure to provide this certificate will result in rejection of the bid submitted by the bidder, as non-responsive.

Reference to Instructions to Bidders	**Bidding Data**
IB.7 7.1	**Contents of Bidding Documents** The Bidding Documents, in addition to invitation for bids, are those stated below and should be read in conjunction with any Addenda issued in accordance with Clause IB.9. 1. Instructions to Bidders. 2. Bid data sheet. 3. General Conditions of Contract, Part-I(GCC). 4. Special Conditions of Contract, Part-II(SCC). 5. Specifications – Special Provisions. 6. Specifications – Technical Provisions. 7. Form of Bid & Appendices to Bid, including a Certificate that the bidder is not currently blacklisted by the Procuring Agency. 8. Bill of Quantities 9. Form of Bid Security. 10. Form of Contract Agreement. 11. **Forms of Performance Security, Mobilization Advance, Bank Guarantee and Secured Advance.** 12. Drawings.
IB.8 8.1	**Clarification of Bidding Documents** All queries shall be directed to: through **Punjab e-Procurement System (eP)**
IB.10 10.1	**Language of Bid:** English.
IB.11 11.1	**Documents Comprising the Bid** Entire text of Sub-Clause IB.8.1 is deleted and substituted with the following: The Bid shall comprise two envelopes submitted simultaneously, one called the Technical Bid and the other the Price Bid, each containing the documents listed here under, both envelopes enclosed together in one outer single envelope. Technical Bid (a) Duly filled-in Form of Technical Bid; (b) Bid Security; (c) Written power of attorney, duly notarized, authorizing the signatory of the Bid to act for and on behalf of the Bidder; (d) Duly filled-in all Appendices to Bid except Appendix-D to Bid (Bill of Quantities), along with all requisite attachments/supporting documentary evidences; (e) Proof of purchase of the Bidding Documents directly from the Employer; (f) Other documents required to be submitted as stated in Eligibility and Qualification Criteria and Bidder's Qualification Forms; and

Reference to Instructions to Bidders	**Bidding Data**
	(g) Any other documents required to be submitted with Technical Bid in accordance with these Bidding Documents. The Bidder shall submit sufficient details to demonstrate the adequacy of the Bid in meeting requirements for timely completion of the Works. <u>Price Bid</u> (a) Duly filled-in Form of Price Bid; (b) Duly filled-in Schedule-A to Bid (Summary of Bid Schedule); and (c) Any other documents required to be submitted with Price Bid in accordance with these Bidding Documents.
IB.12	**Bid Prices, Currencies of Bid and Payment**
12.1	Unless stated otherwise in the Bidding Documents, the Contract shall be for the whole of the Works as described in IB 1.1 hereof, based on the unit rates and / or prices submitted by the bidder.
12.2	The bidders shall fill in rates and prices for all items of the Works described in the Bill of Quantities. Items against which no rate or price is entered by a bidder will not be paid for by the Employer when executed and shall be deemed covered by rates and prices for other items in the Bill of Quantities.
12.3	All duties, taxes and other levies payable by the Contractor under the Contract, or for any other cause, as on the date **<u>of opening of the bids</u>** shall be included in the rates and prices and the total Bid Price submitted by a bidder. Additional / reduced duties, taxes and levies due to subsequent additions or changes in legislation shall be reimbursed / deducted as per Sub-Clause 70.2 of the General Conditions of Contract Part-I.
12.4	The rates and prices quoted by the bidders are subject to adjustment during the performance of the Contract in accordance with the provisions of Clause 70 of the Conditions of Contract. The bidders shall furnish the prescribed information for the price adjustment formulae in Appendix C to Bid and shall submit with the bids such other supporting information as required under the said clause. Period of Bid Validity is one hundred Eighty (180) days after the Date of Bid Opening.
IB.14 14.1	**Bid Validity, Format Signing of Bid and Submission of Bid** Period of Bid Validity is one hundred eighty (180) days after the Date of Bid Opening.
14.4	The text of Sub-Clause IB.14.4 is deleted and substituted with the following: Each bidder shall prepare the bid in PDF format as specified in Bidding Data of the documents comprising the bid as described in Clause IB.8 as appropriate.

Reference to Instructions to Bidders	**Bidding Data**
14.5	Following paragraph is added at the end of this Sub-Clause. Bidding Documents, all Addenda, corrigenda, clarifications and supplementary information issued by the Employer, initialed and stamped by the person or persons signing the bid, shall also be submitted with the Bid for the purpose of acknowledgment of its receipt.
14.6	The bid submitted through **Punjab e-Procurement System (eP)**
14.7	Following is added at the end of this Clause: Bids shall be prepared and submitted on the Form of "Bid" provided in the Bidding Documents. All blank spaces must be filled in and completed. Form of Bid must be without interlineations or alteration of the original wording. Bids with incomplete and/or unsigned Form of Bid may be rejected /considered Non-Responsive.
IB.15 15.1	**Bid Security** <u>Amount of Bid Security</u> Amount of Bid Security shall be Pak. Rs. 399,870/- as fixed lumpsum. The Bid Security shall be, at the option of the bidder, in the form of Deposit at Call or a Bank Guarantee issued by a Scheduled Bank in Pakistan or counter guaranteed by a Scheduled Bank in Pakistan
IB.20 20.1	**Deadline for submission of Bids** As mentioned in Invitation to Bid. If in case/scenario the last date of submission is declared a public holiday the next working day shall be considered the deadline for submission of bids.
IB.23 23.1	**Bid opening, Clarification and Evaluation** The Employer will open the Technical Bids in public at the address, date and time specified in the Bid data sheet in the presence of Bidders` designated representatives and anyone who choose to attend. The Financial Bids will remain unopened and will be held in custody of the Employer until the specified time of their opening.
23.2	First, envelopes marked "WITHDRAWAL" shall be opened and read out and the envelope with the corresponding bid shall not be opened, but returned to the Bidder. No bid withdrawal shall be permitted unless the corresponding Withdrawal Notice contains a valid authorization to request the withdrawal and is read out at bid opening.
23.3	Second, outer envelopes marked "SUBSTITUTION" shall be opened. The inner envelopes containing the Substitution Technical Bid and/or Substitution Financial Bid shall be exchanged for the corresponding envelopes being substituted, which are to be returned to the Bidder unopened. Only the Substitution Technical Bid, if any, shall be opened, read out, and recorded. Substitution Financial Bid will remain unopened in

Reference to Instructions to Bidders	**Bidding Data**
	accordance with IB 23.1. No envelope shall be substituted unless the corresponding
23.4	Substitution Notice contains a valid authorization to request the substitution and is read out and recorded at bid opening.
23.5	Next, outer envelopes marked "MODIFICATION" shall be opened. No Technical Bid and/or Financial Bid shall be modified unless the corresponding Modification Notice contains a valid authorization to request the modification and is read out and recorded at the opening of Technical Bids. Only the Technical Bids, both Original as well as Modification, are to be opened, read out, and recorded at the opening. Financial Bids, both Original and Modification, will remain unopened in accordance with IB 23.1. The Bidders' representatives who are present shall be requested to sign the record. The omission of a Bidder's signature on the record shall not invalidate the contents and effect of the record. A copy of the record shall be distributed to all Bidders.
23.6	Other envelopes holding the Technical Bids shall be opened one at a time, and the following read out and recorded: a) the name of the Bidder; b) whether there is a modification or substitution; c) the presence of a Bid Security, if required; and d) Any other details as the Employer may consider appropriate. No Bid shall be rejected at the opening of Technical Bids except for late bids, in accordance with IB 21.1. Only Technical Bids read out and recorded at bid opening, shall be considered for evaluation.
23.7	**Preliminary Examination of Technical Bids** a) The Employer shall first examine qualification and experience Data as per appendix M and N submitted by the Bidder. The technical proposal examination of those bidders only shall be taken in hand who meet the minimum requirement as mentioned in appendix M and N. Only substantially responsive qualification shall be considered for further evaluation. b) The Employer shall examine the Technical Bid to confirm that all the documents have been provided, and to determine the completeness of each document submitted.
23.8	The Employer shall confirm that all the documents and information have been provided for evaluation of Technical bid as required under these bidding documents.
23.9	At the end of the evaluation of the Technical Bids, the Employer will invite only those bidders who have submitted substantially responsive Technical Bids and who have been determined as being qualified for award to attend the opening of the Financial Bids. The date, time, and location of the opening of Financial Bids will be advised in writing by the Employer. Bidders shall be given reasonable notice for the opening of Financial Bids. The Employer will notify Bidders in writing who have been rejected on the

Reference to Instructions to Bidders	**Bidding Data**
	grounds of their Technical Bids being substantially non-responsive to the requirements of the Bidding Document and return their Financial Bids unopened as per rule 38(2)(a)(vii) of PPR-14.
23.10	The Employer shall conduct the opening of Financial Bids of all Bidders who submitted substantially responsive Technical Bids, publically in the presence of Bidders` representatives who choose to attend at the address, date and time specified by the Employer. The Bidder's representatives who are present shall be requested to sign a register evidencing their attendance.
23.11	All envelopes containing Financial Bids shall be opened one at a time and the following read out and recorded: a) The name of the Bidder; b) Whether there is a modification or substitution; c) The Bid Prices, including any discounts; and d) Any other details as the Employer may consider appropriate. Only Financial Bids and discounts, read out and recorded during the opening of Financial Bids shall be considered for evaluation. No Bid shall be rejected at the opening of Financial Bids.
23.12	If this Bidding Document allows Bidders to quote separate prices for different contracts, and the award to a single Bidder of multiple contracts, the methodology to determine the lowest evaluated price of the contract combinations is that which is most economical to the Employer. .
IB.24 24.1	**Process to be Confidential** Information relating to the examination, clarification, evaluation and comparison of bid and recommendations for the award of a contract shall not be disclosed to bidders or any other person not officially concerned with such process before the announcement of final bid evaluation report which shall be done at least 10 days prior to the award of Contract. The announcement to all Bidders will include table(s) comprising read out prices, discounted prices, price adjustments made (if applicable), final evaluated prices and recommendations against all the bids evaluated. Any effort by a bidder to influence the Employer's processing of bids or award decisions may result in the rejection of such bidder's bid. Whereas any bidder feeling aggrieved may lodge a written complaint not later than ten 10 days after the announcement of Technical and Financial Bids. No bidder will be allowed to file grievance petition w.r.t. Technical Evaluation after announcement/ uploading of Financial Evaluation Report. However mere fact of lodging a complaint shall not warrant suspension of the procurement process.
IB.29	**Award**

Reference to Instructions to Bidders	**Bidding Data**
29.1	Subject to Clauses IB.30 and IB.34, the Employer will award the Contract to the bidder whose bid has been determined to be substantially responsive to the Bidding Documents and who has offered the lowest evaluated Bid Price, provided that such bidder has been determined to be eligible in accordance with the provisions of Clause IB.3 and qualify pursuant to IB 29.2.
29.2	The Employer, at any stage of the bid evaluation, having credible reasons for or prima facie evidence of any defect in bidder's capacities, may require the bidders to provide information concerning their professional, technical, financial, legal or managerial competence whether already pre-qualified or not: Provided that such qualification shall only be laid down after recording reasons in writing. They shall form part of the records of that bid evaluation report.
IB-32 32.1	**Performance Security** Form and amount of performance Security is stated in the Conditions of Contract.

ELIGIBILITY AND QUALFICATION CRITERIA

BIDDER'S QUALIFICATION FORMS

ELIGIBILITY AND QUALIFICATION CRITERIA

1. General

The Employer shall use this Eligibility and Qualification Criteria to evaluate the Bids and qualify the Bidders in accordance with IB.26. The Bidder shall provide all the information requested in the relevant forms contained in Bidder's Qualification Forms provided hereof.

The information provided in the forms shall be substantiated with valid documentary evidences otherwise the requirement will not be considered as complied.

2. Criteria

Eligibility and Qualification Criteria described here below must be met by the legal entity(ies) comprising the Bidder.

2.1 Eligibility

Criteria	Compliance Requirements				Documents
		Joint Venture			
Requirement	Single Entity	All Partners Combined	Each Partner	Lead Partner	Submission Requirements

2.1.1 Nationality

Nationality in accordance with paragraph (a) of Sub-Clause 2.1 of Bidding Data.	must meet requirement	Not applicable	Not applicable	Not applicable	Form of Technical Bid, Forms ELI-1 & ELI–2 with attachments

2.1.2 PEC Licensing

Licensing by Pakistan Engineering Council (PEC) in accordance with paragraph (b) of Sub-Clause 2.1 of Bidding Data.	must meet requirement	Not applicable	Not applicable	Not applicable	PEC License must be valid in category of C- 6 or above and specialized codes CE10 & CE09 (ii)

2.1.3 Tax Registration

Requirement of the firm on Active Taxpayer List (ATL) of FBR in accordance with paragraph (c) of Sub-Clause 2.1 of Bidding Data.	must meet requirement	Not applicable	Not applicable	Not applicable	Extracts of ATL

Criteria	Compliance Requirements				Documents
		Joint Venture			
Requirement	Single Entity	All Partners Combined	Each Partner	Lead Partner	Submission Requirements

2.1.4 Debarment/Blacklisting

Not having been debarred/blacklisted by PIEDMC & PPRA in accordance with paragraph (d) of Sub-Clause 2.1 of Bidding Data.	must meet requirement	Not applicable	Not applicable	Not applicable	Form of Technical Bid

2.1.5 Conflict of Interest

No Conflict of Interest in accordance with paragraph (e) of Sub-Clause 2.1 of Bidding Data.	must meet requirement	Not applicable	Not applicable	Not applicable	Form of Technical Bid, Forms ELI-1 & ELI–2 with attachments

2.2 Pending Litigation and Arbitration

All pending litigation and arbitration, if any, shall be treated as resolved against the Bidder and so shall in total not represent more than fifty percent (50%) of the Bidder's net worth for the last year calculated as the difference between total assets and total liabilities.	must meet requirement	Not applicable	Not applicable	Not applicable	Form LIT – 1 with attachments

2.3 Financial Situation

Criteria	Compliance Requirements				Documents
Requirement	Single Entity	Joint Venture			Submission Requirements
		All Partners Combined	Each Partner	Lead Partner	

2.3.1 Historical Financial Performance

Submission of separate yearly audited financial statements for the last Three (03) years to demonstrate the current soundness of the Bidder's (legal entity) financial position and its prospective long-term profitability. As a minimum, Net worth for the last year, calculated as the difference between total assets and total liabilities should be positive.	must meet requirement	Not applicable	Not applicable	Not applicable	Form FIN – 1 with attachments

2.3.2 Average Annual Construction Turnover

Minimum average annual construction turnover of PKR 20 million calculated as total certified payments received for contracts in progress or completed, within the last three (3) years.	must meet requirement	Not applicable	Not applicable	Not applicable	Form FIN – 2 with attachments

2.4 Experience in Contracts of Similar Size and Nature

Criteria	Compliance Requirements				Documents
Requirement	Single Entity	Joint Venture			Submission Requirement
		All Partners Combined	Each Partner	Lead Partner	
Minimum Three (03) projects of similar size & nature in last five (05) years related to similar nature of works in public sector organizations, each project amount should not less than PKR 15 Million.	must meet requirement	Not applicable	Not applicable	Not applicable	Form EXP-1 with attachments

Notes:

(i) Project having amounting less than PKR 15 million shall not be considered.

(ii) The Road works, dam, irrigation canals and telecom projects will not be considered as "similar nature" projects.

(iii) The projects shall have been executed as prime contractor only.

(iv) The Bidder shall submit authenticated documentary evidence which include Taking Over Certificate/Completion Certificate of the Contracts being claimed under above mentioned criteria.

2.5 Personnel

The Bidder must demonstrate that it has the suitably qualified personnel for the key positions that meet the following requirements and will be made available for this contract as per requirements:

Sr. No.	Position	Total Work Experience [years]	Experience In Similar Work [years]
1	Drilling Supervisor / Site Engineer	05	02
2	Mechanical Engineer	05	02
3	Quantity Surveyor	05	02
4	Civil Surveyor	05	02
5	Asst. Driller / Helper	05	02
6	Electrician	05	02
7	Mechanical Technician	05	02

The Bidder shall provide details of the above-mentioned personnel that the Bidder considers appropriate to perform the Contract together with their academic qualifications and experience. The Bidder shall also complete the Forms PER-1 and PER-2.

2.6 Equipment

The Bidder must demonstrate that it has owned the following key equipment:

Sr. No.	Equipment Type	*Minimum Numbers Required
1	Water Bowser/Tanker	1
2	Tractor Trolley	1
3	Diesel Generator	1
4	Hand tools and pipe wrenches	1
5	Lifting slings / chains	1
6	Welding and cutting equipment	1

* These are the minimum requirements. However, the Bidder should have sufficient resources to complete the Project within scheduled time. The Bidder shall provide details of proposed items of equipment using Form EQUIP-1.

To establish its qualifications to perform the Contract in accordance with Eligibility and Qualification Criteria, the Bidders shall provide all the information requested in the corresponding forms included herein.

1	Form ELI - 1:	Bidder Information Sheet (In case of Single Entity)
2	Form ELI - 2:	Bidder Information Sheet (In case of Joint Venture)
3	Form LIT - 1:	Pending Litigation and Arbitration
4	Form FIN - 1:	Financial Situation
5	Form FIN - 2:	Average Annual Construction Turnover
6	Form FIR - 1:	Financial Resources
7	Form FIR - 2:	Current Contract Commitments/Works in Progress
8	Form EXP - 1:	Experience in Contracts of Similar Size and Nature
9	Form PER - 1:	Proposed Personnel
10	Form PER-2:	Resume of Proposed Personnel

-Note-

General: The information provided in the corresponding forms included herein should be substantiated with valid documentary evidences otherwise the requirement will not be considered as complied.
For FIN-2: The applicant must attach certified copies of payments to support the figures mentioned above

(i) Form ELI - 1: Bidder Information Sheet (In case of Single Entity)

Bidder Information	
Bidder's legal name	
Bidder's country of constitution	
Bidder's year of constitution	
Bidder's legal address in country of constitution	
Bidder's authorized representative information (name, address, telephone numbers, fax numbers, e-mail address)	
Attached are copies of the following documents. ❑ 1. Articles of incorporation or constitution of the legal entity named above along with list of controlling shareholders, directors and legal representative. ❑ 2. Authorization to represent the firm named above.	

(ii) **Form ELI - 2: Bidder Information Sheet (In case of Joint Venture)**

Each partner of a JV must fill in this form.

Joint Venture Information	
Bidder's legal name	
JV Partner's legal name	
JV Partner's country of constitution	
JV Partner's year of constitution	
JV Partner's legal address in country of constitution	
JV Partner's authorized representative information (name, address, telephone numbers, fax numbers, e-mail address)	
Attached are copies of the following documents. ❑ 1. Articles of incorporation or constitution of the legal entity named above along with list of controlling shareholders, directors and legal representative. ❑ 2. Authorization to represent the firm named above. ❑ 3 Joint Venture Agreement; a statement to the effect shall be included in the JV Agreement that all partners of the Joint Ventures shall at all times and under all circumstances be liable jointly and severally for the execution of the Contract in accordance with the Contract terms.	

(iii) Form LIT - 1: Pending Litigation and Arbitration

Each Bidder or partner of a JV must fill in this form.

Pending Litigation and Arbitration			
❑ Choose one of the following: ☐ No pending litigation and arbitration in accordance with Criterion 2.2 of Eligibility and Qualification Criteria ☐ Below is a description of all Pending litigation and arbitration in accordance with Criterion 2.2 of Eligibility and Qualification Criteria Net worth for the last year = PKR _____ [As per Form FIN - 1]			
Year	**Matter in Dispute**	**Value of Pending Claim in respective currency _____**	**Value of Pending Claim in PKR Equivalent**
Total			
Value of Pending Claim as a Percentage of Net Worth			

(iv) Form FIN - 1: Financial Situation

Each Bidder or partner of a JV must fill in this form.

Financial Data for Previous 3 [Years PKR Equivalent]		
Year 1:	**Year 2:**	**Year 3:**

Information from Balance Sheet

Total Assets (TA)			
Total Liabilities (TL)			
Net Worth =TA-TL			
Current Assets (CA)			
Current Liabilities (CL)			
Working Capital = CA-CL			

Information from Income Statement

Total Revenues			
Profits Before Taxes			
Profits After Taxes			

❑ Attached are copies of financial statements (balance sheets including all related notes, and income statements) for the last five years, as indicated above, complying with the following conditions.

- All such documents reflect the financial situation of the firm.
- Historic financial statements must be audited by a certified accountant.
- Historic financial statements must be complete, including all notes to the financial statements.
- Historic financial statements must correspond to accounting periods already completed and audited (no statements for partial periods shall be requested or accepted).

(v) Form FIN - 2: Average Annual Construction Turnover

Each Bidder or partner of a JV must fill in this form.

Annual Turnover Data for Last 3 Years	
Year	**Amount (PKR)**
Average Annual Turnover:	

The information supplied should be the Annual Construction Turnover of the Bidder or each member of a JV in terms of the amounts billed to clients for each year for contracts in progress or completed.

Form EXP – 1: Experience in Contracts of Similar Size and Nature

Each Bidder or partner of a JV must fill this form.

Fill out one (1) form per contract.

Contract of Similar Size and Nature		
Name of Firm:		
Contract No	**Contract Identification**	
Award Date:		**Completion Date:**
Total Contract Amount	**in respective currency _____:** **in PKR Equivalent*:**	
If partner in a Joint Venture, specify participation of total contract amount	**Percentage share in Total:** **Corresponding Amount (in PKR):**	
Employer's name **Address** **Telephone number** **Fax number** **E-mail**		
Description of the Similarity in Accordance with Criterion 2.4 of Eligibility and Qualification Criteria		

* Converted to PKR at the rate of exchange at the date of contract.

Form PER - 1: Proposed Personnel

The Bidder shall provide the names of suitably qualified personnel to meet the specified requirements stated in Eligibility and Qualification Criteria. The data on their experience should be supplied using the Form below for each candidate.

1.	**Title of Position***
	Name
2.	**Title of Position***
	Name
3.	**Title of Position***
	Name
4.	**Title of Position***
	Name
7.	**Title of Position***
	Name

*As listed in Eligibility and Qualification Criteria

Form PER - 2: Resume of Proposed Personnel

Position		
Personnel Information	**Name**	**Date of birth**
	Professional qualifications along with PEC registration No. (if applicable):	
	Total Work Experience [Years]:	**Experience in Similar Work [Years]:**
Present Employment	**Name of Employer**	
	Address of Employer	
	Telephone	**Contact (manager / personnel officer)**
	Fax	**E-mail**
	Job title	**Years with present Employer**

Summarize professional experience in reverse chronological order. Indicate particular technical and managerial experience relevant to the project.

From	To	Company/Project/Position/Relevant Technical and Management Experience

Form EQUIP - 1: Equipment

The Bidder shall provide adequate information to demonstrate clearly that it has the capability to meet the requirements for the key equipment listed in Eligibility and Qualification Criteria. A separate Form shall be prepared for each item of equipment listed.

Item of Equipment		
Equipment Information	**Name of manufacturer**	**Model and power rating**
	Capacity	**Year of manufacture**
Current Status	**Current location**	
	Details of current commitments	
Source	**Indicate source of the equipment** ☐ **Owned** ☐ **Rented** ☐ **Leased**	

FORM OF BID
AND
SCHEDULES TO BID

FORM OF BID AND SCHEDULES TO BID

FORM OF BID

(LETTER OF OFFER)

Bid Reference No. _____

_____

_____

(Name of Works)

To:

_____

_____

_____

Gentlemen,

1. Having examined the Bidding Documents including Instructions to Bidders, Bidding Data, Conditions of Contract, Contract Data, Specifications, Drawings, if any, Schedule of Prices and Addenda Nos. _____ for the execution of the above-named Works, we, the undersigned, being a company doing business under the name of and address _____ _____ and being duly incorporated under the laws of Pakistan hereby offer to execute and complete such Works and remedy any defects therein in conformity with the said Documents including Addenda thereto for the Total Bid Price of Rs_____(Rupees_____) or such other sum as may be ascertained in accordance with the said Documents.
2. We understand that all the Schedules attached hereto form part of this Bid.
3. As security for due performance of the undertakings and obligations of this Bid, we submit herewith a Bid Security in the amount of _____ _____ drawn in your favour or made payable to you and valid for a period of twenty eight (28) days beyond the period of validity of Bid.
4. We undertake, if our Bid is accepted, to commence the Works and to deliver and complete the Works comprised in the Contract within the time(s) stated in Contract Data.
5. We agree to abide by this Bid for the period of _____ days from the date fixed for receiving the same and it shall remain binding upon us and may be accepted at any time before the expiration of that period.
6. Unless and until a formal Agreement is prepared and executed, this Bid, together with your written acceptance thereof, shall constitute a binding contract between us.
7. We undertake, if our Bid is accepted, to execute the Performance Security referred to in Conditions of Contract for the due performance of the Contract.
8. We understand that you are not bound to accept the lowest or any bid you may receive.
9. We do hereby declare that the Bid is made without any collusion, comparison of figures or arrangement with any other person or persons making a bid for the Works.

Dated this_____day of _____, 20

Signature _____

in the capacity of _____duly authorized to sign bid for and on behalf of _____

(Name of Bidder in Block Capitals)

(Seal)

Address

_____

_____

_____

Witness:

(Signature)_____

Name:_____

Address: _____

_____

SCHEDULES TO BID INCLUDE THE FOLLOWING:

- Schedule A to Bid: Schedule of Prices (BOQ)
- Schedule B to Bid: Specific Works Data
- Schedule C to Bid: Works to be Performed by Subcontractors
- Schedule D to Bid: Proposed Programme of Works
- Schedule F to Bid: Integrity Pact]

SCHEDULE – A TO BID

SCHEDULE OF PRICES

Sr. No.	
1.	Preamble to Schedule of Prices
2.	Schedule of Prices

PREAMBLE TO SCHEDULE OF PRICES

1. **General**

1.1 The Schedule of Prices shall be read in conjunction with the Conditions of Contract, Contract Data together with the Specifications and Drawings, if any.

1.2 The Contract shall be for the whole of the Works as described in these Bidding Documents. Bids must be for the complete scope of works.

2. **Description**

2.1 The general directions and descriptions of works and materials are not necessarily repeated nor summarized in the Schedule of Prices. References to the relevant sections of the Bidding Documents shall be made before entering prices against each item in the Schedule of Prices.

3. **Units & Abbreviations**

3.1 Units of measurement, symbols and abbreviations expressed in the Bidding Documents shall comply with as given in the BOQ

(Note:The abbreviations to be used in the Schedule of Prices to be defined by the Employer).

4. **Rates and Prices**

4.1 Except as otherwise expressly provided under the Conditions of Contract, the rates and amounts entered in the Schedule of Prices shall be the rates at which the Contractor shall be paid and shall be the full inclusive value of the works set forth or implied in the Contract; except for the amounts reimbursable, if any to the Contractor under the Contract.

4.2 Unless otherwise stipulated in the Contract Data, the rates and prices entered by the bidder shall not be subject to adjustment during the performance of the Contract.

4.3 All duties, taxes and other levies payable by the Contractor shall be included in the rates and prices.

4.4 The whole cost of complying with the provisions of the Contract shall be included in the items provided in the Schedule of Prices, and where no items are provided, the cost shall be deemed to be distributed among the rates and prices entered for the related items of the Works and no separate payment will be made for those items.

The rates, prices and amounts shall be entered against each item in the Schedule of Prices. Any item against which no rate or price is entered by the bidder will not be paid for by the Employer when executed and shall be deemed covered by the rates and prices for other items in the Schedule of Prices.

4.5 (a) The bidder shall be deemed to have obtained all information as to and all requirements related thereto which may affect the bid price.

(b) The Contractor shall be responsible to make complete arrangements for the transportation of the Plant to the Site.

4.6 The Contractor shall provide for all parts of the Works to be completed in every respect. Notwithstanding that any details, accessories, etc. required for the complete installation and satisfactory operation of the Works, are not specifically mentioned in the Specifications, such details shall be considered as included in the Contract Price.

5. **Bid Prices**

5.1 Break-up of Bid Prices

The various elements of Bid Prices shall be quoted as detailed by the Employer in the format of Schedule of Prices.

The bidder shall recognize such elements of the costs which he expects to incur the performance of the Works and shall include all such costs in the rates and amounts entered in the Schedule of Prices.

5.2 Total Bid Price

The total of bid prices in the Schedule of Prices shall be entered in the Summary of Bid Prices.

6. **Provisional Sums**

6.1 Provisional Sums included and so designated in the Schedule of Prices if any, shall be expended in whole or in part at the direction and discretion of the Engineer/Employer. The Contractor will only receive payment in respect of Provisional Sums if he has been instructed by the Engineer/Employer to utilise such sums.

SCHEDULE - B TO BID

***SPECIFIC WORKS DATA**

SCHEDULE – C TO BID

WORKS TO BE PERFORMED BY SUBCONTRACTORS

The bidder will do the work with his own forces except the work listed below which he intends to sub-contract.

Items of Works to be Sub-Contracted	Name and address of Sub-Contractors	Statement of similar works previously executed (attach evidence)

Note:

1. No change of Sub-Contractors shall be made by the bidder without prior approval of the Employer.

2. The truthfulness and accuracy of the statement as to the experience of Sub-Contractors is guaranteed by the bidder. The Employer's judgment shall be final as to the evaluation of the experience of Sub-Contractors submitted by the bidder.

3. Statement of similar works shall include description, location & value of works, year completed and name & address of the clients.

SCHEDULE – D TO BID

PROPOSED PROGRAMME OF WORKS

Bidder shall provide a programme in a bar-chart showing the sequence of work items by which he proposes to complete the Works of the entire Contract. The programme should indicate the sequence of work items and the period of time during which he proposes to complete the Works including the activities like designing, schedule of submittal of drawings, ordering and procurement of materials, manufacturing, delivering, construction of civil works, erection, testing and commissioning of Works to be supplied under the Contract.

Not Applicable

SCHEDULE – E TO BID

(INTEGRITY PACT)

DECLARATION OF FEES, COMMISSION AND BROKERAGE ETC. PAYABLE BY THE SUPPLIERS OF GOODS, SERVICES & WORKS IN CONTRACTS WORTH RS. 10.00 MILLION OR MORE

Contract No._____ Dated _____

Contract Value: _____

Contract Title: _____

…… [name of Supplier] hereby declares that it has not obtained or induced the procurement of any contract, right, interest, privilege or other obligation or benefit from Government of Pakistan (GoP) or any administrative subdivision or agency thereof or any other entity owned or controlled by GoP through any corrupt business practice.

Without limiting the generality of the foregoing, [name of Supplier] represents and warrants that it has fully declared the brokerage, commission, fees etc. paid or payable to anyone and not given or agreed to give and shall not give or agree to give to anyone within or outside Pakistan either directly or indirectly through any natural or juridical person, including its affiliate, agent, associate, broker, consultant, director, promoter, shareholder, sponsor or subsidiary, any commission, gratification, bribe, finder's fee or kickback, whether described as consultation fee or otherwise, with the object of obtaining or inducing the procurement of a contract, right, interest, privilege or other obligation or benefit in whatsoever form from GoP, except that which has been expressly declared pursuant hereto.

[name of Supplier] certifies that it has made and will make full disclosure of all agreements and arrangements with all persons in respect of or related to the transaction with GoP and has not taken any action or will not take any action to circumvent the above declaration, representation or warranty.

[name of Supplier] accepts full responsibility and strict liability for making any false declaration, not making full disclosure, misrepresenting facts or taking any action likely to defeat the purpose of this declaration, representation and warranty. It agrees that any contract, right, interest, privilege or other obligation or benefit obtained or procured as aforesaid shall, without prejudice to any other rights and remedies available to GoP under any law, contract or other instrument, be voidable at the option of GoP.

Notwithstanding any rights and remedies exercised by GoP in this regard, [name of Supplier] agrees to indemnify GoP for any loss or damage incurred by it on account of its corrupt business practices and further pay compensation to GoP in an amount equivalent to ten time the sum of any commission, gratification, bribe, finder's fee or kickback given by [name of Supplier] as aforesaid for the purpose of obtaining or inducing the procurement of any contract, right, interest, privilege or other obligation or benefit in whatsoever form from GoP.

Name of Buyer: ……	Name of Seller/Supplier: ……
Signature: ……	Signature: ……
[Seal]	[Seal]

SPECIAL STIPULATIONS

Clause

Conditions of Contract

1.	Employer's name and address	PCC 1.1 (a) (i)	Chief Executive Officer (CEO) Punjab Industrial Estates Development and Management Company (PIEDMC) Commercial Area (North) Sundar Industrial Estate Sundar Raiwind Road Lahore. Tel: 042-35297203-6 Fax: 042-35297207
2	Employer's Representative name and address	PCC 1.1 (a) (iv)	General Manager Estate (GM-E), Gate no 02 Board of Management, Sundar Industrial Estates, Sundar-Raiwind Road, Lahore. Tel: 042-35297291-3
3	Engineer's name and address		The Engineer / Sr. Estate Engineer Gate no 02 Board of Management, Sundar Industrial Estates, Sundar-Raiwind Road, Lahore. Tel: 042-35297291-3
4	Engineer's Representative		AM Procurement & Contracting or nominated by the Engineer
5	Engineer's Authority to issue Variation in emergency	2.1	1% of the contract price stated in the Letter of Acceptance
6	Subcontracting	4.1	The aggregate amount of the works subcontracted shall not exceed 30% of the contract price
7	Language	GCC 5.1	The Language is English
8	Law	GCC 5.1	The Law in-force is that of Islamic Republic of Pakistan
9	Contract Agreement		The contractor shall provide 2 copies of singed Contract Agreement and Contract Documents

11	Law applicable	5.1(b)	The relevant laws applied in the Province of Punjab
12	Time for Furnishing Performance Security	IB. 21	Within 14 days from the date of receipt of Letter of Acceptance
13	Amount of Performance Security	GCC 10.1	10% of Contract Price stated in the Letter of Acceptance.
14	Period of validity of performance security	GCC 10.2	14 days from the date of issuance of the Defects Liability Certificate
15	Time for Furnishing Programme	14.1	Within 14 days from the date of receipt of Letter of Acceptance.
17	Time for Commencement	PCC 41.1	Within 07 days from the date of receipt of Engineer's Notice to Commence which shall be issued within 07 days after signing of Contract Agreement.
18	Time for Completion	43.1, 48.2	180 days from the date of receipt of Engineer's Notice to Commence.
19	Amount of Liquidated Damages	47.1	Rs. 0.05% for each day of delay in completion of the Works subject to a maximum of 10% of Contract Price stated in the Letter of Acceptance.
21	Taking Over Certificate	GCC 48.1	Taking Over Certificate will be issued as a whole
22	Taking Over of Sections or Parts	GCC 48.2	Taking Over Certificate for sectioning parts will not be issued
23	Defects Liability Period	49.1	365 Days from the effective date of Taking Over Certificate.
24	Contractor's overhead and profit including all taxes for the valuation of variation (for non BOQ items)		20% of the actual incurred cost
25	Percentage of Retention Money	60.2	5 % of the amount of Interim Payment Certificate.
26	Limit of Retention Money	60.2	5 % of Contract Price stated in the Letter of Acceptance.
27	Minimum amount of Interim Payment Certificates (Running Bills)	60.2	25 Percentage of Contract Price depending on completion period of the Works.

28	Time of Payment from delivery of Engineer's Interim Payment Certificate to the Employer.	60.10	30 days in case of local currency
29	Mobilization Advance	PCC 60.12 (a)	15 % of Contract Price as stated in the Letter of Acceptance in two parts: i) First Part: 10% before the commencement of works: and ii) Second Part: 05% within 42 days from the date of payment of the First Part, subject to the deployment of adequate staff/equipment, plants, the establishment of the Contractor's colony, and submission of Insurance Policies to the satisfaction of the Engineer or interest on delay payments.
30	Recovery of Mobilization Advance	PCC 60.12 (b)	The advance shall be recovered in equal instalments, first instalment at the expiry of third month after the date of payment of first part of Advance and the last instalment two months before the date of completion of the works
31	Notice to Contractor	PCC 68.2 (b)	General Manager Estate (GM), Gate no 02 Board of Management, Sundar Industrial Estates, Sundar-Raiwind Road, Lahore. Tel: 042-35297291-3 The Engineer/ Estate Engineer Gate no 02 Board of Management, Sundar Industrial Estates, Sundar-Raiwind Road, Lahore. Tel: 042-35297291-3
32	Increase or decrease of cost	Govt. of the Punjab Clause 55	Price adjustment as per clause 70.1 is deleted and replaced by clause 55 (Variation in prices of specified material) by Govt. of the Punjab, original revised contract form for execution of work
33	Currency of Payment	IB.10	PKR (Pak Rupees)

CONTRACT DATA
Conditions of Contract Part-II

1.1.4 **The Employer** means;

1.1.5 CEO-PIEDMC

1.1.5 **The Contractor** means;

_____

_____

1.1.7 **Commencement Date** means;

The date given in the Order to commence the work.

1.1.9 **Time for Completion**: As given in the Order to commence the work.

1.1.20 **The Engineer:**

GM (Estate) Board of Management, Sundar Industrial Estate

1.3 **Documents forming the Contract listed in the order of priority:**

(a) The Contract Agreement
(b) Letter of Acceptance
(c) The completed Form of Bid
(d) Contract Data
(e) Conditions of Contract
(f) The completed Schedules to Bid including Schedule of Prices
(g) The Specifications
(h) The Drawings, if any
(i) _____
(j) _____

2.1 **Provision of Site:**

Date Commencement will be The Date for provision of Site.

3.1 **Authorized person:**

Estate Engineer or as nominated by the Employer

3.2 **Name and address of Engineer's representative**

AM Procurement and Contracting or as nominated by The Engineer.

4.4 **Performance Security:**

10% of the value of each work order in shape of Bank Guarantee / CDR issued by a Scheduled Bank in Pakistan

Validity: Performance Security will remain valid 28 days beyond maintenance / successful completion of DLP period i.e 12-months

5.1 **Requirements for Contractor's design (if any):**

Not Applicable

7.2 **Programme:**

Time for submission:

Within Ten (10) days of the receipt of work order.

9.1 **Period for remedying defects**

Minimum 12-months effective from issuance of Taking Over Certificate.

11.1 **Terms of Payments**

11.2 The quantities given in the BOQ are merely estimation. Payment to the Contractor shall be made as per actual work done dully verified by the Engineer In charge of the project" The minimum value of IPC shall be 25 % of the value of work done.

11.4 **Payment of Retention Money**

(a) Upon the issue of the Taking-Over Certificate with respect to the whole of the Works, one half of the Retention Money, or upon the issue of a Taking-Over Certificate with respect to a Section or part of the Permanent

Works only such proportion thereof as the Engineer determines having regard to the relative value of such Section or part of the Permanent Works, shall be certified by the Engineer for payment to the Contractor.

(b) Upon the expiration of the Defects Liability Period for the Works the other half of the Retention Money shall be certified by the Engineer for payment to the Contractor. Provided that, in the event of different Defects Liability Periods having become applicable to different Sections or part of the Permanent Works pursuant to Clause 48, the expression "expiration of the Defects Liability Period" shall, for the purposes of this Sub-Clause, be deemed to mean the expiration of the latest of such periods. Provided also that if at such time, there shall remain to be executed by the Contractor any work instructed, pursuant to Clause 49 and 50, in respect of the Works, the Engineer shall be entitled to withhold certification until completion of such work of so much of the balance of the Retention Money as shall, in the opinion of the Engineer, represent the cost of the work remaining to be executed.

(d) Retention money equal to Five (05%) of the Work done will be payment

11.5 **Currency of payment:**

Pak. Rupees

14.1 **Insurances:**

Clause is deleted in entirety

15.3 **Arbitration**

Place of Arbitration: Lahore.

17. **Liquidated Damages for Delay**

In the fifth line of Sub-clause deletes the words “and not as penalty”

Add the following paragraph at the end of Sub-Clause

The rate of liquidated damages shall be at the rate of 0.05 Percent per day up to maximum of Ten (10) Percent of Contract Price).

Following Clause 18 is added

18. **Financial Assistance to Contractor**

Financial assistance shall be made available to the Contractor by the Employer by adopting the following, upon submission by the Contractor of a Mobilization Advance Guarantee for the full amount of the Advance in the specified form from a Scheduled Bank in Pakistan**:**

(a) An interest-free Mobilization Advance up to 15 % of the Contract Price stated in the Letter of Acceptance in two parts: a) First part, 10% before the commencement of works; and, b) Second part, 5% within 42 days from the date of payment of the first part, subject to the deployment of adequate staff/ equipment, plants, establishment of Contractor’ colony and submission of Insurance Policies to the satisfaction of the Engineer.

(b) This Advance shall be recovered in equal instalments; first instalment at the expiry of third month after the date of payment of first part of Advance and the last instalment two months before the date of completion of the Works as per Clause 43 hereof.

FORMS

BID SECURITY
PERFORMANCE SECURITY
CONTRACT AGREEMENT
MOBILIZATION ADVANCE GUARANTEE/BOND
AND
INDEMNITY BOND FOR SECURED ADVANCE

BID SECURITY

(**Bank Guarantee)**

Security Executed on _____

(Date)

Name of Surety (Bank) with Address: _____

(Scheduled Bank in Pakistan)

Name of Principal (Bidder) with Address _____

_____

Penal Sum of Security Rupees . _____(Rs. _____)

Bid Reference No. _____

KNOW ALL MEN BY THESE PRESENTS, that in pursuance of the terms of the Bid and at the request of the said Principal (Bidder) we, the Surety above named, are held and firmly bound unto _____

(hereinafter called the 'Employer') in the sum stated above for the payment of which sum well and truly to be made, we bind ourselves, our heirs, executors, administrators and successors, jointly and severally, firmly by these presents.

THE CONDITION OF THIS OBLIGATION IS SUCH, that whereas the Bidder has submitted the accompanying Bid dated _____ for Bid No. _____ for_____(Particulars of Bid) to the said Employer; and

WHEREAS, the Employer has required as a condition for considering said Bid that the Bidder furnishes a Bid Security in the above said sum from a Scheduled Bank in Pakistan or from a foreign bank duly counter-guaranteed by a Scheduled Bank in Pakistan, to the Employer, conditioned as under:

(1) that the Bid Security shall remain in force up to and including the date 30 days after the deadline for validity of bids as stated in the Instructions to Bidders or as it may be extended by the Employer, notice of which extension(s) to the Surety is hereby waived;

(2) that the Bid Security of unsuccessful Bidders will be returned by the Employer after expiry of its validity or upon signing of the Contract Agreement; and

(3) that in the event of failure of the successful Bidder to execute the proposed Contract Agreement for such work and furnish the required Performance Security, the entire said sum be paid immediately to the said Employer pursuant to Clause 15.6 of the Instruction to Bidders for the successful Bidder's failure to perform.

NOW THEREFORE, if the successful Bidder shall, within the period specified therefore, on the prescribed form presented to him for signature enter into a formal Contract with the said Employer in accordance with his Bid as accepted and furnish within fourteen (14) days of his being requested to do so, a Performance Security with good and sufficient surety, as may be required, upon the form prescribed by the said Employer for the faithful performance and proper fulfilment of the said Contract or in the event of non-withdrawal of the said Bid within the time specified for its validity then this obligation shall be void and of no effect, but otherwise to remain in full force and effect.

PROVIDED THAT the Surety shall forthwith pay the Employer, the said sum upon first written demand of the Employer (without cavil or argument) and without requiring the Employer to prove or to show grounds or reasons for such demand, notice of which shall be sent by the Employer by registered post duly addressed to the Surety at its address given above.

PROVIDED ALSO THAT the Employer shall be the sole and final judge for deciding whether the Principal (Bidder) has duly performed his obligations to sign the Contract Agreement and to furnish the requisite Performance Security within the time stated above, or has defaulted in fulfilling said requirements and the Surety shall pay without objection the said sum upon demand from the Employer forthwith and without any reference to the Principal (Bidder) or any other person.

IN WITNESS WHEREOF, the above bounden Surety has executed the instrument under its seal on the date indicated above, the name and seal of the Surety being hereto affixed and these presents duly signed by its undersigned representative pursuant to authority of its governing body.

SURETY (Bank)

WITNESS: Signature _____

1. _____ Name _____

_____ Title _____

Corporate Secretary (Seal) Corporate Guarantor (Seal)

2. _____

_____

Name, Title & Address

FORM OF PERFORMANCE SECURITY
(Bank Guarantee)

Guarantee No._____
Executed on _____
Expiry date _____

[Letter by the Guarantor to the Employer]

Name of Guarantor (Bank) with address:_____
(Scheduled Bank in Pakistan)

Name of Principal (Contractor) with address:_____
_____

Penal Sum of Security (express in words and figures)_____
_____

Letter of Acceptance No. _____Dated _____

KNOW ALL MEN BY THESE PRESENTS, that in pursuance of the terms of the Bidding Documents and above said Letter of Acceptance (hereinafter called the Documents) and at the request of the said Principal we, the Guarantor above named, are held and firmly bound unto the _____ (hereinafter called the Employer) in the penal sum of the amount stated above for the payment of which sum well and truly to be made to the said Employer, we bind ourselves, our heirs, executors, administrators and successors, jointly and severally, firmly by these presents.

THE CONDITION OF THIS OBLIGATION IS SUCH, that whereas the Principal has accepted the Employer's above said Letter of Acceptance for _____ _____ (Name of Contract) for the _____

_____ (Name of Project).

NOW THEREFORE, if the Principal (Contractor) shall well and truly perform and fulfill all the undertakings, covenants, terms and conditions of the said Documents during the original terms of the said Documents and any extensions thereof that may be granted by the Employer, with or without notice to the Guarantor, which notice is, hereby, waived and shall also well and truly perform and fulfill all the undertakings, covenants terms and conditions of the Contract and of any and all modifications of said Documents that may hereafter be made, notice of which modifications to the Guarantor being hereby waived, then, this obligation to be void; otherwise to remain in full force and virtue till all requirements of Clause 49, Defects Liability, of Conditions of Contract are fulfilled.

Our total liability under this Guarantee is limited to the sum stated above and it is a condition of any liability attaching to us under this Guarantee that the claim for payment in writing shall be received by us within the validity period of this Guarantee, failing which we shall be discharged of our liability, if any, under this Guarantee.

We, _____ (the Guarantor), waiving all objections and defences under the Contract, do hereby irrevocably and independently guarantee to pay to the Employer without delay upon the Employer's first written demand without cavil or arguments and without requiring the Employer to prove or to show grounds or reasons for such demand any sum or sums up to the amount stated above, against the Employer's written declaration that the Principal has refused or failed to perform the obligations under the Contract which payment will be effected by the Guarantor to Employer's designated Bank & Account Number.

PROVIDED ALSO THAT the Employer shall be the sole and final judge for deciding whether the Principal (Contractor) has duly performed his obligations under the Contract or has defaulted in fulfilling said obligations and the Guarantor shall pay without objection any sum or sums up to the amount stated above upon first written demand from the Employer forthwith and without any reference to the Principal or any other person.

IN WITNESS WHEREOF, the above-bounden Guarantor has executed this Instrument under its seal on the date indicated above, the name and corporate seal of the Guarantor being hereto affixed and these presents duly signed by its undersigned representative, pursuant to authority of its governing body.

_____

Guarantor (Bank)

Witness:

1. _____

Signature _____

_____

Name _____

Corporate Secretary (Seal)

Title _____

2. _____

_____

Name, Title & Address

_____

Corporate Guarantor (Seal)

FORM OF CONTRACT AGREEMENT

THIS CONTRACT AGREEMENT (hereinafter called the "Agreement") made on the _____ day of_____(month) 20_____ between _____ (hereafter called the "Employer") of the one part and _____ (hereafter called the "Contractor") of the other part.

WHEREAS the Employer is desirous that certain Works, viz _____ should be executed by the Contractor and has accepted a Bid by the Contractor for the execution and completion of such Works and the remedying of any defects therein.

NOW this Agreement witnesseth as follows:

1. In this Agreement, words and expressions shall have the same meanings as are respectively assigned to them in the Conditions of Contract hereinafter referred to.

2. The following documents after incorporating addenda / Clarification as agreed or otherwise, if any, except those parts relating to Instructions to Bidders shall be deemed to form and be read and construed as part of this Contract, viz:

   (a) The Contract Agreement;
   (b) The Letter of Acceptance;
   (c) The completed Form of Bid (Technical & Financial);
   (d) Special Stipulations (Appendix-A to Bid);
   (e) The Special Conditions of Contract – Part II;
   (f) The General Conditions – Part I;
   (g) The Drawings;
   (h) The priced Bill of Quantities (Appendix-D to Bid);
   (i) The completed Appendices to Bid (B, C, E to O);
   (j) The Specifications.
   (k) _____ (any other)

3. In consideration of the payments to be made by the Employer to the Contractor as hereinafter mentioned, the Contractor hereby covenants with the Employer to execute and complete the Works and remedy defects therein in conformity and in all respects with the provisions of the Contract.

4. The Employer hereby covenants to pay the Contractor, in consideration of the execution and completion of the Works as per provisions of the Contract, the Contract Price or such other sum as may become payable under the provisions of the Contract at the times and in the manner prescribed by the Contract.

IN WITNESS WHEREOF the parties hereto have caused this Agreement to be executed on the day, month and year first before written in accordance with their respective laws.

Signature of the Contactor	Signature of Employer
_____	_____
(Seal)	(Seal)

Signed, Sealed and Delivered in the presence of:

Witness:	Witness:
_____	_____
(Name, Title and Address)	(Name, Title and Address)

MG-1

MOBILIZATION ADVANCE GUARANTEE
(Unconditional Bank Guarantee)

Guarantee No._____ Date _____

WHEREAS _____(hereinafter called the 'Employer') has entered into a Contract for _____

(Particulars of Contract)

with _____ (hereinafter called the "Contractor').

AND WHEREAS, the Employer has agreed to advance to the Contractor, at the Contractor's request, an amount of Rupees _____ (Rs _____) which amount shall be advanced to the Contractor as per provisions of the Contract.

AND WHEREAS, the Employer has asked the Contractor to furnish Guarantee to secure the mobilization advance for the performance of his obligations under the said Contract.

AND WHEREAS, _____

(Scheduled Bank in Pakistan acceptable to the Employer)

(hereinafter called the "Guarantor") at the request of the Contractor and in consideration of the Employer agreeing to make the above advance to the Contractor, has agreed to furnish the said Guarantee.

NOW, THEREFORE, the Guarantor hereby guarantees that the Contractor shall use the advance for the purpose of above mentioned Contract and if he fails and commits default in fulfilment of any of his obligations for which the advance payment is made, the Guarantor shall be liable to the Employer for payment not exceeding the aforementioned amount.

Notice in writing of any default, of which the Employer shall be the sole and final judge, on the part of the Contractor, shall be given by the Employer to the Guarantor, and on such first written demand, payment shall be made by the Guarantor of all sums then due under this Guarantee without any reference to the Contractor and without any objection.

This Guarantee shall remain in force until the advance is fully adjusted against payments from the Interim Payment Certificates of the Contractor or until _____whichever is earlier.

(Date)

The Guarantor's liability under this Guarantee shall not in any case exceed the sum of Rupees _____(Rs _____).

This Guarantee shall remain valid up to the aforesaid date and shall be null and void after the aforesaid date or earlier if the advance made to the Contractor is fully adjusted against payments from Interim Payment Certificates of the Contractor provided that the Guarantor agrees that the aforesaid period of validity shall be deemed to be extended if on the above mentioned date the advance payment is not fully adjusted.

MG-2

GUARANTOR

1. Signature _____
2. Name _____
3. Title _____

WITNESS

1. _____

_____

Corporate Secretary (Seal)

2. _____ _____

(Name Title & Address) Corporate Guarantor(Seal)

IB-1

INDEMNITY BOND

FOR SECURED ADVANCE

AGAINST MATERIALS BROUGHT AT SITE

(ON RS.40 NON-JUDICIAL STAMP PAPER)

This Deed of Indemnity is issued by M/s. _____ _____ *(Name* of *the Contractor)* in favour of *M/s.*_____ *(Name* of *the Employer).*

Whereas _____ (hereinafter called the Employer) has paid the Secured Advance against the cost of material through any Bank or like agency by any other method by virtue of the terms of the contract existing between the parties. The details of the material and their price for which secured advance is being sought for the period _____till consumption of the material is as under:-

1. _____ at Rs._____ per _____ = Rs.
2. _____ at Rs._____ per _____ = Rs.
3. _____ at Rs._____ per _____ = Rs.
4. _____ at Rs._____ per _____ = Rs.

THEREFORE THIS DEED OF INDEMNITY WITHNESSETH AS FOLLOWS:

I/We _____ of M/s. _____ do hereby indemnify M/s _____ for all losses due to thefts, arson, pilferage, loss due to flood and inundation, shortage, deterioration and depreciation etc. through any act of Man or God or slump in the Market of any or all the materials financed or paid by the Employer on our request for financing payment against material.

I/We_____ shall indemnify _____ against any or all claims, action damages arising out of or resulting to the said material.

I/We _____ further declare that we will faithfully abide by the above declaration and solemnly affirm that we will not remove, sell, pilferage any of the materials against which M/s _____ has paid us such a secured advance and will not pledge the same with any Bank, Finance Corporation, Firm, Company, Individual or the like agency or create any change whereon in any from what so ever.

I/We _____ do hereby also declare that in the event of my/our infringement of the declaration made above _____ will be entitled to forfeit all such material and also proceed against me/us according to the relevant clause pertaining to breach of contract and further invoke the power or seek any remedies secured of _____ under the contract Agreement signed with us or otherwise available under law.

Place_____ Dated _____

Contractor _____

[Notes on the Conditions of Contract]

The Conditions of Contract comprise two parts:

(a) Part I - General Conditions of Contract

(b) Part II - Special Conditions of Contract

Over the years, a number of "model" General Conditions of Contract have evolved. Assistance has been obtained for the one used in these Standard Bidding Documents from the International Federation of Consulting Engineers (Federation Internationale des Ingenieurs-Conseils, or FIDIC), making the same compatible with the PPRA, Act, 2009 and the PPR-14.

These have been prepared for an ad measurement (unit price or unit rate) type of contract, and cannot be used without major modifications for other types of contract, such as lump sum, turnkey, or target cost contracts.

The standard text of the General Conditions of Contract chosen must be retained intact to facilitate its reading and interpretation by bidders and its review by the Client. Any amendments and additions to the General Conditions, specific to the contract in hand, should be introduced in the Special Conditions of Contract.

The use of standard conditions of contract for all civil Works will ensure comprehensiveness of coverage, better balance of rights or obligations between Employer and Contractor, general acceptability of its provisions, and savings in time and cost for bid preparation and review, leading to more economic prices.

CONDITIONS OF CONTRACT

FOR WORKS OF CIVIL

ENGINEERING CONSTRUCTION

PART I GENERAL CONDITIONS
WITH FORMS OF TENDER AND AGREEMENT

[This contract is based on FIDIC 1987 conditions of contract but according to the viewpoint of Irrigation Department Latest version of FIDIC Pink Book 2010 or FIDIC Red Book 2017 may be adopted, as the practitioners are more familiar and well versed with these latest versions.]

CONTENTS

PART I: GENERAL CONDITIONS

Definitions and Interpretation

1.1 Definitions
1.2 Headings and Marginal Notes
1.3 Interpretation
1.4 Singular and Plural
1.5 Notices, Consents, Approvals, Certificates and Determinations

Engineer and Engineer's Representative

2.1 Engineer's Duties and Authority
2.2 Engineer's Representative
2.3 Engineer's Authority to Delegate
2.4 Appointment of Assistants
2.5 Instructions in Writing
2.6 Engineer to Act Impartially

Assignment and Subcontracting

3.1 Assignment of Contract
4.1 Subcontracting
4.2 Assignment of Subcontractors' Obligations

Contract Documents

5.1 Language/s and Law
5.2 Priority of Contract Documents
6.1 Custody and Supply of Drawings and Documents
6.2 One Copy of Drawings to be Kept on Site
6.3 Disruption of Progress
6.4 Delays and Cost of Delay of Drawings
6.5 Failure by Contractor to Submit Drawings
7.1 Supplementary Drawings and Instructions
7.2 Permanent Works Designed by Contractor
7.3 Responsibility Unaffected by Approval

General Obligations

8.1 Contractor's General Responsibilities
8.2 Site Operations and Methods of Construction
9.1 Contract Agreement
10.1 Performance Security
10.2 Period of Validity of Performance Security
10.3 Claims under Performance Security

11.1 Inspection of Site
12.1 Sufficiency of Tender
12.2 Not Foreseeable Physical Obstructions or Conditions
13.1 Work to be in Accordance with Contract
14.1 Programme to be Submitted
14.2 Revised Programme
14.3 Cash Flow Estimate to be Submitted
14.4 Contractor not Relieved of Duties or Responsibilities
15.1 Contractor's Superintendence
16.1 Contractor's Employees
16.2 Engineer at Liberty to Object
17.1 Setting-out
18.1 Boreholes and Exploratory Excavation
19.1 Safety, Security and Protection of the Environment
19.2 Employer's Responsibilities
20.1 Care of Works
20.2 Responsibility to Rectify Loss or Damage
20.3 Loss or Damage Due to Employer's Risks
20.4 Employer's Risks
21.1 Insurance of Works and Contractor's Equipment
21.2 Scope of Cover
21.3 Responsibility for Amounts not Recovered
21.4 Exclusions
22.1 Damage to Persons and Property
22.2 Exceptions
22.3 Indemnity by Employer
23.1 Third Party Insurance (including Employer's Property)
23.2 Minimum Amount of Insurance
23.3 Cross Liabilities
24.1 Accident or Injury to Workmen
24.2 Insurance Against Accident to Workmen
25.1 Evidence and Terms of Insurances
25.2 Adequacy of Insurances
25.3 Remedy on Contractor's Failure to Insure
25.4 Compliance with Policy Conditions
26.1 Compliance with Statutes, Regulations
27.1 Fossils
28.1 Patent Rights
28.2 Royalties
29.1 Interference With Traffic and Adjoining Properties
30.1 Avoidance of Damage to Roads

30.2 Transport of Contractor's Equipment or Temporary Works
30.3 Transport of Materials or Plant
30.4 Waterborne Traffic
31.1 Opportunities for Other Contractors
31.2 Facilities for Other Contractors
32.1 Contractor to Keep Site Clear
33.1 Clearance of Site on Completion
Labour
34.1 Engagement of Staff and Labour
35.1 Returns of Labour and Contractor's Equipment
Materials, Plant and Workmanship
36.1 Quality of Materials, Plant and Workmanship
36.2 Cost of Samples
36.3 Cost of Tests
36.4 Cost of Tests not Provided for
36.5 Engineer's Determination where Tests not Provided for
37.1 Inspection of Operations
37.2 Inspection and Testing
37.3 Dates for Inspection and Testing
37.4 Rejection
37.5 Independent Inspection
38.1 Examination of Work before Covering up
38.2 Uncovering and Making Openings
39.1 Removal of Improper Work, Materials or Plant
39.2 Default of Contractor in Compliance
Suspension
40.1 Suspension of Work
40.2 Engineer's Determination following Suspension
40.3 Suspension lasting more than 84 Days
Commencement and Delays
41.1 Commencement of Works
42.1 Possession of Site and Access Thereto
42.2 Failure to Give Possession
42.3 Rights of Way and Facilities
43.1 Time for Completion
44.1 Extension of Time for Completion
44.2 Contractor to Provide Notification and Detailed Particulars
44.3 Interim Determination of Extension
45.1 Restriction on Working Hours
46.1 Rate of Progress
47.1 Liquidated Damages for Delay

47.2 Reduction of Liquidated Damages
48.1 Taking-Over Certificate
48.2 Taking-Over of Sections or Parts
48.3 Substantial Completion of Parts
48.4 Surfaces Requiring Reinstatement

Defects Liability

49.1 Defects Liability Period
49.2 Completion of Outstanding Work and Remedying Defects
49.3 Cost of Remedying Defects
49.4 Contractor's Failure to Carry Out Instructions
50.1 Contractor to Search

Alterations, Additions and Omissions

51.1 Variations
51.2 Instructions for Variations
52.1 Valuation of Variations
52.2 Power of Engineer to Fix Rates
52.3 Variations Exceeding 15 percent
52.4 Daywork

Procedure for Claims

53.1 Notice of Claims
53.2 Contemporary Records
53.3 Substantiation of Claims
53.4 Failure to Comply
53.5 Payment of Claims

Contractor's Equipment, Temporary Works and Materials

54.1 Contractor's Equipment, Temporary Works and Materials; Exclusive Use for the Works.
54.2 Employer not Liable for Damage
54.3 Customs Clearance
54.4 Re-export of Contractor's Equipment
54.5 Conditions of Hire of Contractor's Equipment
54.6 Costs for the Purpose of Clause 63
54.7 Incorporation of Clause in Subcontracts
54.8 Approval of Materials not Implied

Measurement

55.1 Quantities
56.1 Works to be Measured
57.1 Method of Measurement
57.2 Breakdown of Lump Sum Items

Provisional Sums
58.1 Definition of "Provisional Sum"
58.2 Use of Provisional Sums
58.3 Production of Vouchers
Nominated Subcontractors
59.1 Definition of "Nominated Subcontractors"
59.2 Nominated Subcontractors; Objection to Nomination
59.3 Design Requirements to be Expressly Stated
59.4 Payments to Nominated Subcontractors
59.5 Certification of Payments to Nominated Subcontractors
Certificates and Payment
60.1 Monthly Statements
60.2 Monthly Payments
60.3 Payment of Retention Money
60.4 Correction of Certificates
60.5 Statement at Completion
60.6 Final Statement
60.7 Discharge
60.8 Final Payment Certificate
60.9 Cessation of Employer's Liability
60.10 Time for Payment
61.1 Approval only by Defects Liability Certificate
62.1 Defects Liability Certificate
62.2 Unfulfilled Obligations
Remedies
63.1 Default of Contractor
63.2 Valuation at Date of Termination
63.3 Payment after Termination
63.4 Assignment of Benefit of Agreement
64.1 Urgent Remedial Work
Special Risks
65.1 No Liability for Special Risks
65.2 Special Risks
65.3 Damage to Works by Special Risks
65.4 Projectile, Missile
65.5 Increased Costs arising from Special Risks
65.6 Outbreak of War
65.7 Removal of Contractor's Equipment on Termination
65.8 Payment if Contract Terminated

Release from Performance

66.1 Payment in Event of Release from Performance

Settlement of Disputes

67.1 Engineer's Decision

67.2 Amicable Settlement

67.3 Arbitration

67.4 Failure to Comply with Engineer's Decision

Notices

68.1 Notice to Contractor

68.2 Notice to Employer and Engineer

68.3 Change of Address

Default of Employer

69.1 Default of Employer

69.2 Removal of Contractor's Equipment

69.3 Payment on Termination

69.4 Contractor's Entitlement to Suspend Work

69.5 Resumption of Work

Changes in Cost and Legislation

70.1 Increase or Decrease of Cost

70.2 Subsequent Legislation

Currency and Rates of exchange

71.1 Currency Restrictions

72.1 Rates of Exchange

72.2 Currency Proportions

72.3 Currencies of Payment for Provisional Sums

REFERENCE TO PART II

INDEX

TENDER (NOT USED)

AGREEMENT (NOT USED)

PART I - GENERAL CONDITIONS

Definitions and Interpretation

1.1 **Definitions**

In the Contract (as hereinafter defined) the following words and expressions shall have the meanings hereby assigned to them, except where the context otherwise requires:

(a) (i) "Employer" means the person named as such in Part II of these Conditions and the legal successors in title to such person, but not (except with the consent of the Contractor) any assignee of such person.

(ii) "Contractor" means the person whose tender has been accepted by the Employer and the legal successors in title to such person, but not (except with the consent of the Employer) any assignee of such person.

(iii) "Subcontractor" means any person named in the Contract as a Subcontractor for a part of the Works or any person to whom a part of the Works has been subcontracted with the consent of the Engineer and the legal successors in title to such person, but not any assignee of any such person.

(iv) "Engineer" means the person appointed by the Employer to act as Engineer for the purposes of the Contract and named as such in Part II of these Conditions.

(v) "Engineer's Representative" means a person appointed from time to time by the Engineer under Sub-Clause 2.2.

(b) (i) "Contract" means these Conditions (Parts I and II), the Specification, the Drawings, the Bill of Quantities, the Tender, the Letter of Acceptance, the Contract Agreement (if completed) and such further documents as may be expressly incorporated in the Letter of Acceptance or Contract Agreement (if completed).

(ii) "Specification" means the specification of the Works included in the Contract and any modification thereof or addition thereto made under Clause 51 or submitted by the Contractor and approved by the Engineer.

(iii) "Drawings" means all drawings, calculations and technical information of a like nature provided by the Engineer to the Contractor under the Contract and all drawings, calculations, samples, patterns, models, operation and maintenance manuals and other technical information of a like nature submitted by the Contractor and approved by the Engineer.

(iv) "Bill of Quantities" means the priced and completed bill of quantities forming part of the Tender.

(v) "Tender" means the Contractor's priced offer to the Employer for the execution and completion of the Works and the remedying of any defects therein in accordance with the provisions of the Contract, as accepted by the Letter of Acceptance.

(vi) "Letter of Acceptance" means the formal acceptance by the Employer of the Tender.

(vii) "Contract Agreement" means the contract agreement (if any) referred to in Sub-Clause 9.1.

(viii) "Appendix to Tender" means the appendix comprised in the form of Tender annexed to these Conditions.

(c) (i) "Commencement Date" means the date upon which the Contractor receives the notice to commence issued by the Engineer pursuant to Clause 41.

(ii) "Time for Completion" means the time for completing the execution of and passing the Tests on Completion of the Works or any Section or part thereof as stated in the Contract (or as extended under Clause 44) calculated from the Commencement Date.

(d) (i) "Tests on Completion" means the tests specified in the Contract or otherwise agreed by the Engineer and the Contractor which are to be made by the Contractor before the Works of any Section or part thereof are taken over by the Employer.

(ii) "Taking-Over Certificate" means a certificate issued pursuant to Clause 48.

(e) (i) "Contract Price" means the sum stated in the Letter of Acceptance as payable to the Contractor for the execution and completion of the Works and the remedying of any defects therein in accordance with the provisions of the Contract.

(ii) "Retention Money" means the aggregate of all monies retained by the Employer pursuant to Sub-Clause 60.2(a).

(iii) “Interim Payment Certificate” means any certificate of payment issued by the Engineer other than the Final Payment Certificate.

(iv) “Final Payment Certificate” means the certificate of payment issued by the Engineer pursuant to Sub-Clause 60.8.

(f) (i) "Works" means the Permanent Works and the Temporary Works or either of them as appropriate.

(ii) "Permanent Works" means the permanent works to be executed (including Plant) in accordance with the Contract

(iii) "Temporary Works" means all temporary works of every kind (other than Contractor's Equipment) required in or about the execution and completion of the Works and the remedying of any defects therein.

(iv) "Plant" means machinery, apparatus and the like intended to form or forming part of the Permanent Works.

(v) "Contractor's Equipment" means all appliances and things of whatsoever nature (other than Temporary Works) required for the execution and completion of the Works and the remedying of any defects therein, but does not include Plant, materials or other things intended to form or forming part of the Permanent Works.

(vi) "Section" means a part of the Works specifically identified in the Contract as a Section.

(vii) "Site" means the places provided by the Employer where the Works are to be executed and any other places as may be specifically designated in the Contract as forming part of the Site.

(g) (i) "cost" means all expenditure properly incurred or to be incurred, whether, on or off the Site, including overhead and other charges properly allocable thereto but does not include any allowance for profit.

(ii) "day" means calendar day.

(iii) "foreign currency" means a currency of a country other than that in which the Works are to be located.

(iv) "writing" means any hand-written, type-written, or printed communication, including telex, cable and facsimile transmission.

1.2 **Headings and Marginal Notes**

The headings and marginal notes in these Conditions shall not be deemed part thereof or be taken into consideration in the interpretation or construction thereof or of the Contract.

1.3 **Interpretation**

Words importing persons or parties shall include firms and corporations and any organization having legal capacity. Interpretation by PPRA shall be final w.r.t. the legal provisions. The PPRA Act, 2009 and the PPR-14 shall supersede the provisions/ text in this document in case of any conflict.

1.4 **Singular and Plural**

Words importing the singular only also include the plural and vice versa where the context requires.

1.5 **Notices, Consents, Approvals, Certificates and Determinations**

Wherever in the Contract provision is made for the giving or issue of any notice, consent, approval, certificate or determination by any person, unless otherwise specified such notice, consent, approval, certificate or determination shall be in writing and the words "notify",

"certify or "determine" shall be construed accordingly. Any such consent, approval, certificate or determination shall not unreasonably be withheld or delayed.

Engineer and Engineer's Representative

2.1 Engineer's Duties and Authority

(a) The Engineer shall carry out the duties specified in the Contract.

(b) The Engineer may exercise the authority specified in or necessarily to be implied from the Contract, provided, however, that if the Engineer is required, under the terms of his appointment by the Employer, to obtain the specific approval of the Employer before exercising any such authority, particulars of such requirements shall be set out in Part II of these Conditions. Provided further that any requisite approval shall be deemed to have been given by the Employer for any such authority exercised by the Engineer.

(c) Except as expressly stated in the Contract, the Engineer shall have no authority to relieve the Contractor of any of his obligations under the Contract.

2.2 Engineer's Representative

The Engineer's Representative shall be appointed by and be responsible to the Engineer and shall carry out such duties and exercise such authority as may be delegated to him by the Engineer under Sub-Clause 2.3.

2.3 Engineer's Authority to Delegate

The Engineer may from time to time delegate to the Engineer's Representative any of the duties and authorities vested in the Engineer and he may at any time revoke such delegation. Any such delegation or revocation shall be in writing and shall not take effect until a copy thereof has been delivered to the Employer and the Contractor.

Any communication given by the Engineer's Representative to the Contractor in accordance with such delegation shall have the same effect as though it had been given by the Engineer. Provided that:

(a) any failure of the Engineer's Representative to disapprove any work, materials or Plant shall not prejudice the authority of the Engineer to disapprove such work, materials or Plant and to give instructions for the rectification thereof; and

(b) if the Contractor questions any communication of the Engineer's Representative he may refer the matter to the Engineer who shall confirm, reverse or vary the contents of such communication.

2.4 Appointment of Assistants

The Engineer or the Engineer's Representative may appoint any number of persons to assist the Engineer's Representative in the carrying out of his duties under Sub-Clause 2.2. He shall notify to the Contractor the names, duties and scope of authority of such persons. Such assistants shall have no authority to issue any instructions to the Contractor save in so far as such instructions may be necessary to enable them to carry out their duties and to secure their acceptance of materials, Plant or workmanship as being in accordance with the Contract, and any instructions given by any of them for those purposes shall be deemed to have been given by the Engineer's Representative.

2.5 Instructions in Writing

Instructions given by the Engineer shall be in writing, provided that if for any reason the Engineer considers it necessary to give any such instruction orally, the Contractor shall comply with such instruction. Confirmation in writing of such oral instruction given by the Engineer, whether before or after the carrying out of the instruction, shall be deemed to be an instruction within the meaning of this Sub-Clause. Provided further that if the Contractor, within 7 days, confirms in writing to the Engineer any oral instruction of the Engineer and

such confirmation is not contradicted in writing within 7 days by the Engineer, it shall be deemed to be an instructions of the Engineer.

The provisions of this Sub-Clause shall equally apply to instructions given by the Engineer's Representative and any assistants of the Engineer or the Engineer's Representative appointed pursuant to Sub-Clause 2.4.

2.6 **Engineer to Act Impartially**

Wherever, under the Contract, the Engineer is required to exercise his discretion by:

(a) giving his decision, opinion or consent,

(b) expressing his satisfaction or approval,

(c) determining value, or

(d) otherwise taking action which may affect the rights and obligations of the Employer or the Contractor

He shall exercise such discretion impartially within the terms of the Contract and having regard to all the circumstances. Any such decision, opinion, consent expression of satisfaction, or approval, determination of value or action may be opened up, reviewed or revised as provided in Clause 67.

Assignment and Subcontracting

3.1 **Assignment of Contract**

The Contractor shall not, without the prior consent of the Employer (which consent, notwithstanding the provisions of Sub-Clause 1.5, shall be at the sole discretion of the Employer), assign the Contract or any part thereof, or any benefit or interest therein or thereunder, otherwise than by:

(a) a charge in favour of the Contractor's bankers of any monies due or to become due under the Contract, or

(b) assignment to the Contractor's insurers (in cases where the insurers have discharged the Contractor's loss or liability) of the Contractor's right to obtain relief against any other party liable.

4.1 **Subcontracting**

The Contractor shall not subcontract the whole of the Works. Except where otherwise provided by the Contract, the Contractor shall not subcontract any part of the Works without the prior consent of the Engineer. Any such consent shall not relieve the Contractor from any liability or obligation under the Contract and he shall be responsible for the acts, defaults and neglects of any Subcontractor, his agents, servants or workmen as fully as if they were the acts, defaults or neglects of the Contractor, his agents servants or workmen.

Provided that the Contractor shall not be required to obtain such consent for:

(a) the provision of labour,

(b) the purchase of materials which are in accordance with the standards specified in the Contract,

(c) the subcontracting of any part of the Works for which the Subcontractor is named in the Contract.

4.2 **Assignment of Subcontractors' Obligations**

In the event of a Subcontractor having undertaken towards the Contractor in respect of the work executed, or the goods, materials, Plant or services supplied by such Subcontractor, any continuing obligation extending for a period exceeding that of the Defects Liability Period under the Contract, the Contractor shall at any time, after the expiration of such Period, assign to the Employer, at the Employer's request and cost, the benefit of such obligation for the unexpired duration thereof.

Contract Documents

5.1 **Language/s and Law**

There is stated in Part II of these Conditions:

(a) the language or languages in which the Contract documents shall be drawn up, and

(b) the country or state the law of which shall apply to the Contract and according to which the Contract shall be construed.

If the said documents are written in more than one language, the language according to which the Contract shall be construed and interpreted is also stated in Part II of these Conditions, being therein designated the "Ruling Language". Interpretation by PPRA shall be final w.r.t. the legal provisions. The PPRA Act, 2009 and the PPR-14 shall supersede the provisions/ text in this document in case of any conflict.

5.2 **Priority of Contract Documents**

The several documents forming the Contract are to be taken as mutually explanatory of one another, but in case of ambiguities or discrepancies the same shall be explained and adjusted by the Engineer who shall thereupon issue to the Contractor instructions thereon and in such event, unless otherwise provided in the Contract, the priority of the documents forming the Contract shall be as follows:

(1) The Contract Agreement (if completed);

(2) The Letter of Acceptance;

(3) The Tender;

(4) Part II of these Conditions;

(5) Part I of these Conditions; and

(6) Any other document forming part of the Contract.

6.1 **Custody and Supply of Drawings and Documents**

The Drawings shall remain in the sole custody of the Engineer, but two copies thereof shall be provided to the Contractor free of charge. The Contractor shall make at his own cost any further copies required by him. Unless it is strictly necessary for the purposes of the Contract, the Drawings, Specification and other documents provided by the Employer or the Engineer shall not, without the consent of the Engineer, be used or communicated to a third party by the Contractor. Upon issue of the Defects Liability Certificate, the Contractor shall return to the Engineer all Drawings, Specification and other documents provided under the Contract.

The Contractor shall supply to the Engineer four copies of all Drawings, specification and other documents submitted by the Contractor and approved by the Engineer in accordance

with Clause 7, together with a reproducible copy of any material which cannot be reproduced to an equal standard by photocopying. In addition the Contractor shall supply such further copies of such Drawings, Specification and other documents as the Engineer may request in writing for the use of the Employer, who shall pay the cost thereof.

6.2 **One Copy of Drawings to be Kept on Site**

One copy of the Drawings, provided to or supplied by the Contractor as aforesaid, shall be kept by the Contractor on the Site and the same shall at all reasonable times be available for inspection and use by the Engineer and by any other person authorised by the Engineer in writing.

6.3 **Disruption of Progress**

The Contractor shall give notice to the Engineer, with a copy to the Employer, whenever planning or execution of the Works is likely to be delayed or disrupted unless any further drawing or instruction is issued by the Engineer within a reasonable time. The notice shall include details of the drawing or instruction required and of why and by when it is required and of any delay or disruption likely to be suffered if it is late.

6.4 **Delay and Cost of Delay of Drawings**

If, by reason of any failure or inability of the Engineer to issue, within a time reasonable in all the circumstances, any drawing or instruction for which notice has been given by the Contractor in accordance with Sub-Clause 6.3, the Contractor suffers delay and/or incurs costs then the Engineer shall, after due consultation with the Employer and the Contractor, determine:

(a) any extension of time to which the Contractor is entitled under Clause 44, and

(b) the amount of such costs, which shall be added to the Contract Price, and shall notify the Contractor accordingly, with a copy to the Employer.

6.5 **Failure by Contractor to Submit Drawings**

If the failure or inability of the Engineer to issue any drawings or instructions is caused in whole or in part by the failure of the Contractor to submit Drawings, Specification or other documents which he is required to submit under the Contract, the Engineer shall take such failure by the Contractor into account when making his determination pursuant to Sub-Clause 6.4.

7.1 **Supplementary Drawings and Instructions**

The Engineer shall have authority to issue to the Contractor, from time to time, such supplementary Drawings and instructions as shall be necessary for the purpose of the proper and adequate execution and completion of the Works and the remedying of any defects therein. The Contractor shall carry out and be bound by the same.

7.2 **Permanent Works Designed by Contractor**

Where the Contract expressly provides that part of the Permanent Works shall be designed by the Contractor, he shall submit to the Engineer, for approval:

(a) such drawings, specifications, calculations and other information as shall be necessary to satisfy the Engineer as to the suitability and adequacy of that design, and

(b) operation and maintenance manuals together with drawings of the Permanent Works as completed, in sufficient detail to enable the Employer to operate, maintain, dismantle, reassemble and adjust the Permanent Works incorporating that design. The Works shall not be considered to be completed for the purposes of taking over in accordance with Clause 48 until such operation and maintenance manuals together with drawings on completion have been submitted to and approved by the Engineer.

7.3 **Responsibility Unaffected by Approval**

Approval by the Engineer, in accordance with Sub-Clause 7.2, shall not relieve the Contractor of any of his responsibilities under the Contract.

General Obligations

8.1 **Contractor's General Responsibilities**

The Contractor shall, with due care and diligence, design (to the extent provided for by the Contract), execute and complete the Works and remedy any defects therein in accordance with the provisions of the Contract. The Contractor shall provide all superintendence, labour, material, Plant, Contractor's Equipment and all other things, whether of a temporary or permanent nature, required in and for such design, execution, completion and remedying of any defects, so far as the necessity for providing the same is specified in or is reasonably to be inferred from the Contract.

8.2 **Site Operations and Methods of Construction**

The Contractor shall take full responsibility for the adequacy, stability and safety of all Site operations and methods of construction. Provided that the Contractor shall not be responsible (except as stated hereunder or as may be otherwise agreed) for the design or specification of Permanent Works, or for the design or specification of any Temporary Works not prepared by the Contractor. Where the Contract expressly provides that part of the Permanent Works shall be designed by the Contractor, he shall be fully responsible for that part of such Works, notwithstanding any approval by the Engineer.

9.1 **Contract Agreement**

The Contractor shall, if called upon so to do, enter into and execute the Contract Agreement, to be prepared and completed at the cost of the Employer, in the form annexed to these Conditions with such modification as may be necessary.

10.1 **Performance Security**

If the Contract requires the Contractor to obtain security for his proper performance of the Contract, he shall obtain and provide to the Employer, such security within 30 days after the receipt of the Letter of Acceptance, in the sum stated in the Appendix to Tender. When providing such security to the Employer, the Contractor shall notify the Engineer of so doing. Such security shall be in the form annexed to these Conditions or in such other form as may be agreed between the Employer and the Contractor. The institution providing such security shall be subject to the approval of the Employer. The cost of complying with the requirements of this Clause shall be borne by the Contractor, unless the Contract otherwise provides.

10.2 **Period of Validity of Performance Security**

The performance security shall be valid until the Contractor has executed and completed the Works and remedied any defects therein in accordance with the Contract. No claim shall be made against such security after the issue of the Defects Liability Certificate in accordance with Sub-Clause 62.1 and such security shall be returned to the Contractor within 14 days of the issue of the said Defects Liability Certificate.

10.3 **Claims under Performance Security**

Prior to making a claim under the performance security the Employer shall, in every case, notify the Contractor stating the nature of the default in respect of which the claim is to be made.

11.1 **Inspection of Site**

The Employer shall have made available to the Contractor, before the submission by the Contractor of the Tender, such data on hydrological and sub-surface conditions as have been obtained by or on behalf of the Employer from investigations undertaken relevant to the Works but the Contractor shall be responsible for his own interpretation thereof.

The Contractor shall be deemed to have inspected and examined the Site and its surroundings and information available in connection therewith and to have satisfied himself (so far as is practicable, having regard to considerations of cost and time) before submitting his Tender, as to:

(a) the form and nature thereof, including the sub-surface conditions,

(b) the hydrological and climatic conditions,

(c) the extent and nature of work and materials necessary for the execution and completion of the Works and the remedying of any defects therein, and

(d) the means of access to the Site and the accommodation he may require,

and, in general, shall be deemed to have obtained all necessary information, subject as above mentioned, as to risks, contingencies and all other circumstances which may influence or affect his Tender.

The Contractor shall be deemed to have based his Tender on the data made available by the Employer and on his own inspection and examination, all as aforementioned.

12.1 **Sufficiency of Tender**

The Contractor shall be deemed to have satisfied himself as to the correctness and sufficiency of the Tender and of the rates and prices stated in the Bill of Quantities, all of which shall, except insofar as it is otherwise provided in the Contract, cover all his obligations under the Contract (including those in respect of the supply of goods, materials, Plant or services or of contingencies for which there is a Provisional Sum) and all matters and things necessary for the proper execution and completion of the Works and the remedying of any defects therein.

12.2 **Not Foreseeable Physical Obstructions or Conditions**

If, however, during the execution of the Works the Contractor encounters physical obstructions or physical conditions, other than climatic conditions on the Site, which obstructions or conditions were, in his opinion, not foreseeable by an experienced contractor, the Contractor shall forthwith give notice thereof to the Engineer, with a copy to the Employer. On receipt of such notice, the Engineer shall if in his opinion such obstructions or conditions could not have been reasonably foreseen by an experienced contractor, after due consultation with the Employer and the Contractor, determine:

(a) any extension of time to which the Contractor is entitled under Clause 44, and

(b) the amount of any costs which may have been incurred by the Contractor by reason of such obstructions or conditions having been encountered, which shall be added to the Contract Price,

and shall notify the Contractor accordingly, with a copy to the Employer. Such determination shall take account of any instruction which the Engineer may issue to the Contractor in connection therewith, and any proper and reasonable measures acceptable to the Engineer which the Contractor may take in the absence of specific instructions from the Engineer.

13.1 **Work to be in Accordance with Contract**

Unless it is legally or physically impossible, the Contractor shall execute and complete the Works and remedy any defects therein in strict accordance with the Contract to the satisfaction of the Engineer. The Contractor shall comply with and adhere strictly to the Engineer's instructions on any matter, whether mentioned in the Contract or not, touching or concerning the Works. The Contractor shall take instructions only from the Engineer (or his delegate).

14.1 **Programme to be Submitted**

The Contractor shall, within the time stated in Part II of these Conditions after the date of the Letter of Acceptance, submit to the Engineer for his consent a programme, in such form and detail as the Engineer shall reasonably prescribe, for the execution of the Works. The Contractor shall, whenever required by the Engineer, also provide in writing for his information a general description of the arrangements and methods which the Contractor proposes to adopt for the execution of the Works. The Employer shall also be provided a

copy of each document provided by the Contractor for record and information.

14.2 **Revised Programme**

If at any time it should appear to the Engineer that the actual progress of the Works does not conform to the programme to which consent has been given under Sub-Clause 14.1, the Contractor shall produce, at the request of the Engineer, a revised programme showing the modifications to such programme necessary to ensure completion of the Works within the Time for Completion. The Employer shall also be provided a copy of each document provided by the Contractor for record and information.

14.3 **Cash Flow Estimate to be Submitted**

The Contractor shall, within the time stated in Part II of these Conditions after the date of the Letter of Acceptance, provide to the Engineer for his information a detailed cash flow estimate, in quarterly periods, of all payments to which the Contractor will be entitled under the Contract and the Contractor shall subsequently supply revised cash flow estimates at quarterly intervals, if required to do so by the Engineer. The Employer shall also be provided a copy of each document provided by the Contractor for record and information.

14.4 **Contractor not Relieved of Duties or Responsibilities**

The submission to and consent by the Engineer of such programmes or the provision of such general descriptions or cash flow estimates shall not relieve the Contractor of any of his duties or responsibilities under the Contract.

15.1 **Contractor's Superintendence**

The Contractor shall provide all necessary superintendence during the execution of the Works and as long thereafter as the Engineer may consider necessary for the proper fulfilling of the Contractor's obligations under the Contract. The Contractor, or a competent and authorized representative approved of by the Engineer, which approval may at any time be withdrawn, shall give his whole time to the superintendence of the Works. Such authorized representative shall receive, on behalf of the Contractor, instructions from the Engineer.

If approval of the representative is withdrawn by the Engineer, the Contractor shall, as soon as is practicable, having regard to the requirement of replacing him as hereinafter mentioned, after receiving notice of such withdrawal, remove the representative from the Works and shall not thereafter employ him again on the Works in any capacity and shall replace him by another representative approved by the Engineer.

16.1 **Contractor's Employees**

The Contractor shall provide on the Site in connection with the execution and completion of the Works and the remedying of any defects therein:

(a) only such technical assistants as are skilled and experienced in their respective callings and such foremen and leading hands as are competent to give proper superintendence of the Works, and

(b) such skilled, semi skilled and unskilled labour as is necessary for the proper and timely fulfilling of the Contractor's obligations under the Contract.

16.2 **Engineer at Liberty to Object**

The Engineer shall be at liberty to object to and require the Contractor to remove forthwith from the Works any person provided by the Contractor who, in the opinion of the Engineer, misconducts himself, or is incompetent or negligent in the proper performance of his duties, or whose presence on Site is otherwise considered by the Engineer to be undesirable, and such person shall not be again allowed upon the Works without the consent of the Engineer. Any person so removed from the Works shall be replaced as soon as possible. The Employer may also register objection in this regard for reasonable decision by the Engineer.

17.1 **Setting-out**

The Contractor shall be responsible for:

(a) the accurate setting-out of the Works in relation to original points, lines and levels of reference given by the Engineer in writing,

(b) the correctness, subject as above mentioned of the position, levels dimensions and alignment of all parts of the Works, and

(c) the provision of all necessary instruments, appliances and labour in connection with the foregoing responsibilities.

If, at any time during the execution of the Works, any error appears in the position, levels, dimensions or alignment of any part of the Works, the Contractor, on being required so to do by the Engineer, shall, at his own cost, rectify such error to the satisfaction of the Engineer, unless such error is based on incorrect data supplied in writing by the Engineer, in which case the Engineer shall determine an addition to the Contract Price in accordance with Clause 52 and shall notify the Contractor accordingly, with a copy to the Employer.

The checking of any setting-out or of any line or level by the Engineer shall not in any way relieve the Contractor of his responsibility for the accuracy thereof and the Contractor shall carefully protect and preserve all bench-marks, sight-rails, pegs and other things used in setting-out the Works.

18.1 **Boreholes and Exploratory Excavation**

If, at any time during the execution of the Works, the Engineer requires the Contractor to make boreholes or to carry out exploratory excavation, such requirement shall be the subject of an instruction in accordance with Clause 51, unless an item or a Provisional Sum in respect of such work is included in the Bill of Quantities.

19.1 **Safety, Security and Protection of the Environment**

The Contractor shall, throughout the execution and completion of the Works and the remedying of any defects therein:

(a) have full regard for the safety of all persons entitled to be upon the Site and keep the Site (so far as the same is under his control) and the Works (so far as the same are not completed or occupied by the Employer) in an orderly state appropriate to the avoidance of danger to such persons,

(b) provide and maintain at his own cost all lights, guards, fencing, warning signs and watching, when and where necessary or required by the Engineer or by any duly constituted authority, for the protection of the Works or for the safety and convenience of the public or others, and

(c) take all reasonable steps to protect the environment on and off the Site and to avoid damage or nuisance to persons or to property of the public or others resulting from pollution, noise or other causes arising as a consequence of his methods of operation.

19.2 **Employer's Responsibilities**

If under Clause 31 the Employer shall carry out work on the Site with his own workmen he shall, in respect of such work:

(a) have full regard to the safety of all persons entitled to be upon the Site, and

(b) keep the Site in an orderly state appropriate to the avoidance of danger to such persons.

If under Clause 31 the Employer shall employ other contractors on the Site he shall require them to have the same regard for safety and avoidance of danger.

20.1 **Care of Works**

The Contractor shall take full responsibility for the care of the Works and materials and Plant for incorporation therein from the Commencement Date until the date of issue of the Taking-Over Certificate for the whole of the Works, when the responsibility for the said care shall pass to the Employer. Provided that:

(a) if the Engineer issues a Taking-Over Certificate for any Section or part of the Permanent Works the Contractor shall cease to be liable for the care of that Section or part from the date of issue of the Taking-Over Certificate, when the responsibility for the care of that Section or part shall pass to the Employer, and

(b) the Contractor shall take full responsibility for the care of any outstanding Works and materials and Plant for incorporation therein which he undertakes to finish during the Defects Liability Period until such outstanding Works have been completed pursuant to Clause 49.

20.2 **Responsibility to Rectify Loss or Damage**

If any loss or damage happens to the Works, or any part thereof, or materials or Plant for incorporation therein, during the period for which the Contractor is responsible for the care thereof, from any cause whatsoever, other than the risks defined in Sub-Clause 20.4, the Contractor shall, at his own cost, rectify such loss or damage so that the Permanent Works conform in every respect with the provisions of the Contract to the satisfaction of the Engineer. The Contractor shall also be liable for any loss or damage to the Works occasioned by him in the course of any operations carried out by him for the purpose of complying with his obligations under Clauses 49 and 50.

20.3 **Loss or Damage Due to Employer's Risks**

In the event of any such loss or damage happening from any of the risks defined in Sub-Clause 20.4, or in combination with other risks, the Contractor shall, if and to the extent required by the Engineer, rectify the loss or damage and the Engineer shall determine an addition to the Contract Price in accordance with Clause 52 and shall notify the Contractor accordingly, with a copy to the Employer. In the case of a combination or risks causing loss or damage any such determination shall take into account the proportional responsibility of the Contractor and the Employer.

20.4 **Employer's Risks**

The Employer's risks are:

(a) war, hostilities (whether war be declared or not), invasion, act of foreign enemies,
(b) rebellion, revolution, insurrection, or military or usurped power, or civil war,
(c) ionising radiations, or contamination by radio-activity from any nuclear fuel, or from any nuclear waste from the combustion of nuclear fuel, radio-active toxic explosive, or other hazardous properties of any explosive nuclear assembly or nuclear component thereof,
(d) pressure waves caused by aircraft or other aerial devices travelling at sonic or supersonic speeds,
(e) riot, commotion or disorder, unless solely restricted to employees of the Contractor or of his Subcontractor and arising from the conduct of the Works,
(f) loss or damage due to the use or occupation by the Employer of any Section or part of the Permanent Works, except as may be provided for in the Contract,
(g) loss or damage to the extent that it is due to the design of the Works, other than any part of the design provided by the Contractor or for which the Contractor is responsible. [It shall be ensured that the Design Consultants remain available for Top Supervision and rectification of any subsequent faults/ issues till the successful completion of the project/ closing of the contract including defect liability period if any];
(h) any operation of the forces of nature against which an experienced contractor could not reasonably have been expected to take precautions.

21.1 **Insurance of Works and Contractor's Equipment**

The Contractor shall, without limiting his or the Employer's obligations and responsibilities under Clause 20, insure:

(a) the Works, together with materials and Plant for incorporation therein, to the full replacement cost (the term “cost” in this context shall include profit),

(b) an additional sum of 15 per cent of such replacement cost, or as may be specified in Part II of these Conditions, to cover any additional costs of and incidental to the rectification of loss or damage including professional fees and the cost of demolishing and removing any part of the Works and of removing debris of whatsoever nature, and

(c) the Contractor's Equipment and other things brought onto the Site by the Contractor, for a sum sufficient to provide for their replacement at the Site.

21.2 **Scope of Cover**

The insurance in paragraphs (a) and (b) of Sub-Clause 21.1 shall be in the joint names of the Contractor and the Employer and shall cover:

(a) the Employer and the Contractor against all loss or damage from whatsoever cause arising, other than as provided in Sub-Clause 21.4, form the start of work at the Site until the date of issue of the relevant Taking-Over Certificate in respect of the Works or any Section or part thereof as the case may be, and

(b) the Contractor for his liability:

(i) during the Defects Liability Period for loss or damage arising from a cause occurring prior to the commencement of the Defects Liability Periods, and

(ii) for loss or damage occasioned by the Contractor in the course of any operations carried out by him for the purpose of complying with his obligations under Clauses 49 and 50.

21.3 **Responsibility for Amounts not Recovered**

Any amounts not insured or not recovered from the insurers shall be borne by the Employer or the Contractor in accordance with their responsibilities under Clause 20.

21.4 **Exclusions**

There shall be no obligation for the insurances in Sub-Clause 21.1 to include loss or damage caused by:

(a) war, hostilities (where war be declared or not), invasion, act of foreign enemies,

(b) rebellion, revolution, insurrection, or military or usurped power, or civil war,

(c) ionising, radiations, or contamination by radio-activity from any nuclear fuel, or from any nuclear waste from the combustion of nuclear fuel, radio-active toxic explosive or other hazardous properties of any explosive nuclear assembly or nuclear component thereof, or

(d) pressure waves caused by aircraft or other aerial devices travelling at sonic or supersonic speeds.

22.1 **Damage to Persons and Property**

The Contractor shall, except if and so far as the Contract provides otherwise, indemnify the Employer against all losses and claims in respect of:

(a) death of or injury to any person, or

(b) loss of or damage to any property (other than the Works),

which may arise out of or in consequence of the execution and completion of the Works and the remedying of any defects therein, and against all claims, proceedings, damages, costs, charges and expenses whatsoever in respect thereof or in relation thereto, subject to the exceptions defined in Sub-Clause 22.2.

22.2 **Exceptions**

The "exceptions" referred to in Sub-Clause 22.1 are:

(a) the permanent use or occupation of land by the Works, or any part thereof,

(b) the right of the Employer to execute the Works, or any part thereof, on, over, under, is or through any land,

(c) damage to property which is the unavoidable result of the execution and completion of the Works, or the remedying of any defects therein, in accordance with the Contract, and

(d) death of or injury to persons or loss of or damage to property resulting from any act or neglect of the Employer, his agents servants or other contractors, not being employed by the Contractor, or in respect of any claims, proceedings, damages, costs, charges and expenses in respect thereof or in relation thereto or, where the injury or damage was contributed to by the Contractor, his servants or agents, such part of the said injury or damage as may be just and equitable having regard to the extent of the responsibility of the Employer, his servants or agents or other contractors for the injury or damage.

22.3 **Indemnity by Employer**

The Employer shall indemnify the Contractor against all claims, proceedings, damages, costs, charges and expenses in respect of the matters referred to in the exceptions defined in Sub-Clause 22.2

23.1 **Third Party Insurance (including Employer's Property)**

The Contractor shall, without limiting his or the Employer's obligation and responsibilities under Clause 22, insure, in the joint names of the Contractor and the Employer, against liabilities for death of or injury to any person (other than as provided in Clause 24) or loss of or damage to any property (other than the Works) arising out of the performance of the Contract, other than the exceptions defined in paragraphs (a), (b) and (c) of Sub-Clause 22.2.

23.2 **Minimum Amount of Insurance**

Such insurance shall be for at least the amount stated in the Appendix to Tender.

23.3 **Cross Liabilities**

The insurance policy shall include a cross liability clause such that the insurance shall apply to the Contractor and to the Employer as separate insureds.

24.1 **Accident or Injury to Workmen**

The Employer shall not be liable for or in respect of any damages or compensation payable to any workman or other person in the employment of the Contractor or any Subcontractor, other than death or injury resulting from any act or default of the Employer, his agents or servants. The Contractor shall indemnify and keep indemnified the Employer against all such damages and compensation, other than those for which the Employer is liable as aforesaid, and against all claims, proceedings, damages, costs, charges, and expenses whatsoever in respect thereof or in relation thereto.

24.2 **Insurance Against Accident to Workmen**

The Contractor shall insure against such liability and shall continue such insurance during the whole of the time that any persons are employed by him on the Works. Provided that, in respect of any persons employed by any Subcontractor, the Contractor's obligations to insure as aforesaid under the Sub-Clause shall be satisfied if the Subcontractor shall have insured against the liability in respect of such persons in such manner that the Employer is indemnified under the policy, but the Contractor shall require such Subcontractor to produce to the Employer, when required, such policy of insurance and the receipt for the payment of the current premium.

25.1 **Evidence and Terms of Insurances**

The Contractor shall provide evidence to the Employer prior to the start of work at the Site that the insurances required under the Contract have been effected and shall, within 84 days of the Commencement Date, provide the insurance policies to the Employer. When providing such evidence and such policies to the Employer, the Contractor shall notify the Engineer of so doing. Such insurance policies shall be consistent with the general terms agreed prior to the issue of the Letter of Acceptance. The Contractor shall effect all insurances for which he is responsible with insurers and in terms approved by the Employer.

25.2 **Adequacy of Insurances**

The Contractor shall notify the insurers of changes in the nature, extent or programme for the execution of the Works and ensure the adequacy of the insurances at all times in accordance with the terms of the Contract and shall, when required, produce to the Employer the insurance policies in force and the receipts for payment of the current premiums.

25.3 **Remedy on Contractor's Failure to Insure**

If the Contractor fails to effect and keep in force any of the insurances required under the Contract, or fails to provide the policies to the Employer within the period required by Sub-Clause 25.1, then and in any such case the Employer may effect and keep in force any such insurances and pay any premium as may be necessary for that purpose and from time to time deduct the amount so paid from any monies due or to become due to the Contractor, or recover the same as a debt due from the Contractor.

25.4 **Compliance with Policy Conditions**

In the event that the Contractor or the Employer fails to comply with conditions imposed by the insurance policies effected pursuant to the Contract, each shall indemnify the other against all losses and claims arising from such failure.

26.1 **Compliance with Statutes, Regulations**

The Contractor shall conform in all respects, including by the giving of all notices and the paying of all fees, with the provisions of:

(a) any National or State Statute, Ordinance, or other Law, or any regulation, or bye-law of any local or other duly constituted authority in relation to the execution and completion of the Works and the remedying of any defects therein, and

(b) the rules and regulations of all public bodies and companies whose property or rights are affected or may be affected in any way by the Works,

and the Contractor shall keep the Employer indemnified against all penalties and liability of every kind for breach of any such provisions. Provided always that the Employer shall be responsible for obtaining any planning, zoning or other similar permission required for the Works to proceed and shall indemnify the Contractor in accordance with Sub-Clause 22.3.

27.1 **Fossil**

All fossils, coins, articles of value or antiquity and structures and other remains or things of geological or archaeological interest discovered on the Site shall, as between the Employer and the Contractor, be deemed to be the absolute property of the Employer. The Contractor shall take reasonable precautions to prevent his workmen or any other persons from removing or damaging any such article or thing and shall, immediately upon discovery thereof and before removal, acquaint the Engineer of such discovery and carry out the Engineer's instructions for dealing with the same. If, by reason of such instructions, the Contractor suffers delay and/or incurs costs then the Engineer shall, after due consultation with the Employer and the Contractor, determine:

(a) any extension of time to which the Contractor is entitled under Clause 44, and

(b) the amount of such costs, which shall be added to the Contract Price,

and shall notify the Contractor accordingly, with a copy to the Employer.

28.1 **Patent Rights**

The Contractor shall save harmless and indemnify the Employer from and against all claims and proceedings for or on account of infringement of any patent rights, design trademark or name or other protected rights in respect of any Contractor's Equipment, materials or Plant used for or in connection with or for incorporation in the Works and from and against all damages, costs, charges and expenses whatsoever in respect thereof or in relation thereto, except where such infringement results from compliance with the design or Specification provided by the Engineer.

28.2 **Royalties**

Except where otherwise stated, the Contractor shall pay all tonnage and other royalties, rent and other payments or compensation, if any, for getting stone, sand, gravel, clay or other materials required for the Works.

29.1 **Interference with Traffic and Adjoining Properties**

All operations necessary for the execution and completion of the Works and the remedying of any defects therein shall, so far as compliance with the requirements of the Contract permits, be carried on so as not to interfere unnecessarily or improperly with:

(a) the convenience of the public, or

(b) the access to, use and occupation of public or private roads and footpaths to or of properties whether in the possession of the Employer or of any other person.

The Contractor shall save harmless and indemnify the Employer in respect of all claims, proceedings, damages, costs, charges and expenses whatsoever arising out of, or in relation to, any such matters insofar as the Contractor is responsible therefore.

30.1 **Avoidance of Damage to Roads**

The Contractor shall use every reasonable means to prevent any of the roads or bridges communicating with or on the routes to the Site from being damaged or injured by any traffic of the Contractor or any of his Subcontractors and, in particular, shall select routes, choose and use vehicles and restrict and distribute loads so that any such extraordinary traffic as will inevitably arise from the moving of materials, Plant, Contractor's Equipment or Temporary Works from and to the Site shall be limited, as far as reasonably possible, and so that no unnecessary damage or injury may be occasioned to such roads and bridges.

30.2 **Transport of Contractor's Equipment or Temporary Works**

Save insofar as the Contract otherwise provides, the Contractor shall be responsible for and shall pay the cost of strengthening any bridges or altering or improving any road communicating with or on the routes to the Site to facilitate the movement of Contractor's Equipment or Temporary Works and the Contractor shall indemnify and keep indemnified the Employer against all claims for damage to any such road or bridge caused by such movement, including such claims as may be made directly against the Employer, and shall negotiate and pay all claims arising solely out of such damage.

30.3 **Transport of Materials or Plant**

If, notwithstanding Sub-Clause 30.1, any damage occurs to any bridge or road communicating with or on the routes to the Site arising from the transport of materials or Plant, the Contractor shall notify the Engineer with a copy to the Employer, as soon as he becomes aware of such damage or as soon as he receives any claim from the authority entitled to make such claim. Where under any law or regulation the haulier of such materials or Plant is required to indemnify the road authority against damage the Employer shall not be liable for any costs, charges or expenses in respect thereof or in relation thereto. In other cases the Employer shall negotiate the settlement of and pay all sums due in respect of such claim and shall indemnify the Contractor in respect thereof and in respect of all claims, proceedings damages, costs, charges and expenses in relation thereto. Provided that if and so far as any such claim or part thereof is, in the opinion of the Engineer, due to any failure on the part of the Contractor to observe and perform his obligations under Sub-Clause 30.1, then the amount determined by the Engineer, after due consultation with the Employer and the Contractor, to be due to such failure shall be recoverable from the Contractor by the Employer and may be deducted by the Employer from any monies due or to become due to the Contractor and the Engineer shall notify the Contractor accordingly, with a copy to the Employer. Provided also that the Employer shall notify the Contractor whenever a settlement is to be negotiated and, where any amount may be due from the Contractor, the Employer shall consult with the Contractor before such settlement is agreed.

30.4 **Waterborne Traffic**

Where the nature of the Works is such as to require the use by the Contractor of waterborne

transport the foregoing provisions of this Clause shall be construed as though "road" included a lock, dock, sea wall or other structure related to a waterway and "vehicle" included craft, and shall have effect accordingly.

31.1 **Opportunities for Other Contractors**

The Contractor shall, in accordance with the requirements of the Engineer, afford all reasonable opportunities for carrying out their work to:

(a) any other contractors employed by the Employer and their workmen,

(b) the workmen of the Employer, and

(c) the workmen of any duly constituted authorities who may be employed in the execution on or near the Site of any work not included in the Contract or of any contract which the Employer may enter into in connection with or ancillary to the Works.

31.2 **Facilities for Other Contractors**

If, however, pursuant to Sub-Clause 31.1 the Contractor shall, on the written request of the Engineer:

(a) make available to any other contractor, or to the Employer or any such authority, any roads or ways for the maintenance of which the Contractor is responsible,

(b) permit the use, by any such, of Temporary Works or Contractor's Equipment on the Site, or

(c) provide any other service of whatsoever nature for any such,

the Engineer shall determine an addition to the Contract Price in accordance with Clause 52 and shall notify the Contractor accordingly, with a copy to the Employer.

32.1 **Contractor to Keep Site Clear**

During the execution of the Works the Contractor shall keep the Site reasonably free from all unnecessary obstruction and shall store or dispose of any Contractor's Equipment and surplus materials and clear away and remove from the Site any wreckage, rubbish or Temporary Works no longer required.

33.1 **Clearance of Site on Completion**

Upon the issue of any Taking-Over Certificate the Contractor shall clear away and remove from that part of the Site to which such Taking-Over Certificate relates all Contractor's Equipment, surplus materials, rubbish and Temporary Works of every kind, and leave such part of the Site and Works clean and in a workmanlike condition to the satisfaction of the Engineer. Provided that the Contractor shall be entitled to retain on Site, until the end of the Defects Liability Period, such materials, Contractor's Equipment and Temporary Works as are required by him for the purpose of fulfilling his obligations during the Defects Liability Period.

Labour

34.1 **Engagement of Staffs and Labour**

The Contractor shall, unless otherwise provided in the Contract, make his own arrangements for the engagement of all staff and labour, local or other, and for their payment, housing, feeding and transport.

35.1 **Returns of Labour and Contractor's Equipment**

The Contractor shall, if required by the Engineer, deliver to the Engineer a return in detail, in such form and at such intervals as the Engineer may prescribe, showing the staff and the numbers of the several classes of labour from time to time employed by the Contractor on the Site and such information respecting Contractor's Equipment as the Engineer may require.

Materials, Plant and Workmanship

36.1 **Quality of Materials, Plant and Workmanship**

All materials, Plant and workmanship shall be:

(a) of the respective kinds described in the Contract and in accordance with the Engineer's instructions, and

(b) subjected from time to time to such tests as the Engineer may require at the place of manufacture, fabrication or preparation, or on the Site or at such other place or places as may be specified in the Contract, or at all or any of such places.

The Contractor shall provide such assistance, labour, electricity, fuels, stores, apparatus and instruments as are normally required for examining, measuring and testing any materials or Plant and shall supply samples of materials, before incorporation in the Works, for testing as may be selected and required by the Engineer.

36.2 **Cost of Samples**

All samples shall be supplied by the Contractor at his own cost if the supply thereof is clearly intended by or provided for in the Contract.

36.3 **Cost of Tests**

The cost of making any test shall be borne by the Contractor if such test is:

(a) clearly intended by or provided for in the Contract, or

(b) particularised in the Contract (in cases only for a test under load or of a test to ascertain whether the design of any finished or partially finished work is appropriate for the purposes which it was intended to fulfil) in sufficient detail to enable the Contractor to price or allow for the same in his Tender.

36.4 **Cost of Tests not Provided for**

If any test required by the Engineer which is:

(a) not intended by or provided for,

(b) (in the cases above mentioned) not so particularised, or

(c) (through so intended or provided for) required by the Engineer to be carried out at any place other than the Site or the place of manufacture, fabrication or preparation of the materials or Plant tested,

shows the materials, Plant or workmanship not to be in accordance with the provisions of the Contract to the satisfaction of the Engineer, then the cost of such test shall be borne by the Contractor, but in any other case Sub-Clause 36.5 shall apply.

36.5 **Engineer's Determination where Tests not Provided for**

Where, pursuant to Sub-Clause 36.4, this Sub-Clause applies the Engineer shall, after due consultation with the Employer and the Contractor, determine:

(a) any extension of time of which the Contractor is entitled under Clause 44, and

(b) the amount of such costs, which shall be added to the Contract Price,

and shall notify the Contractor accordingly, with a copy to the Employer.

37.1 **Inspection of Operations**

The Engineer, and any person authorised by him, shall at all reasonable times have access to the Site and to all workshops and places where materials or Plant are being manufactured, fabricated or prepared for the Works and the Contractor shall afford every facility for and every assistance in obtaining the right to such access. The Employer may also inspect the site/ works anytime and may record and duly communicate the observations, specially w.r.t. quality and quantity, for reasonable and just decision by the Engineer for which the Engineer shall be personally held responsible along-with the Resident Supervision firm if any which employed the Engineer.

37.2 **Inspection and Testing**

The Engineer shall be entitled, during manufacture, fabrication or preparation to inspect and test the materials and Plant to be supplied under the Contract. If materials or Plant are being manufactured, fabricated or prepared in workshops or places other than those of the Contractor, the Contractor shall obtain permission for the Engineer to carry out such inspection and testing in those workshops or places. Such inspection or testing shall not release the Contractor from any obligation under the Contract. The Employer may also inspect the site/ works anytime and may record and duly communicate the observations, specially w.r.t. quality and quantity, for reasonable and just decision by the Engineer for which the Engineer shall be personally held responsible along-with the Resident Supervision firm if any which employed the Engineer.

37.3 **Dates for Inspection and Testing**

The Contractor shall agree with the Engineer on the time and place for the inspection or testing of any materials or Plant as provided in the Contract. The Engineer shall give the Contractor not less than 24 hours notice of his intention to carry out the inspection or to attend the tests. If the Engineer, or his duly authorised representative, does not attend on the date agreed, the Contractor may, unless otherwise instructed by the Engineer, proceed with the tests, which shall be deemed to have been made in the presence of the Engineer. The Contractor shall forthwith forward to the Engineer duly certified copies of the tests readings. If the Engineer has not attended the tests, he shall accept the said readings as accurate.

37.4 **Rejection**

If, at the time and place agreed in accordance with Sub-Clause 37.3, the materials or Plant are not ready for inspection or testing or if, as a result of the inspection or testing referred to in this Clause, the Engineer determines that the materials or Plant are defective or otherwise not in accordance with the Contract, he may reject the materials or Plant and shall notify the Contractor thereof immediately. The notice shall state the Engineer's objections with reasons. The Contractor shall then promptly make good the defect or ensure that rejected materials or Plant comply with the Contract. If the Engineer so requests, the tests of rejected materials or Plant shall be made or repeated under the same terms and conditions. All costs incurred by the Employer by the repetition of the test shall after due consultation with the Employer and the Contractor, be determined by the Engineer and shall be recoverable from the Contractor by the Employer and may be deducted from any monies due or to become due to the Contractor and the Engineer shall notify the Contractor accordingly, with a copy to the Employer.

37.5 **Independent Inspection**

The Engineer may delegate inspection and testing of materials or Plant to an independent inspector. Any such delegation shall be effected in accordance with Sub-Clause 2.4 and for this purpose such independent inspector shall be considered as an assistant of the Engineer. Notice of such appointment (not being less than 14 days) shall be given by the Engineer to the Contractor.

38.1 **Examination of Work before Covering up**

No part of the works shall be covered up or put out of view without the approval of the Engineer and the Contractor shall afford full opportunity for the Engineer to examine and measure any such part of the Works which is about to be covered up or put out of view and to examine foundations before any part of the Works is placed thereon. The Contractor shall give notice to the Engineer whenever any such part of the Works or foundations is or are ready or about to be ready for examination and the Engineer shall, without unreasonable delay, unless he considers it unnecessary and advises the Contractor accordingly, attend for the purpose of examining and measuring such part of the Works or of examining such foundations. A copy of such notices shall also be communicated to the Employer.

38.2 **Uncovering and Making Openings**

The Contractor shall uncover any part of the Works or make openings in or through the same as the Engineer may from time to time instruct and shall reinstate and make good such

part. If any such part has been covered up or put out of view after compliance with the requirement of Sub-Clause 38.1 and is found to be executed in accordance with the Contract, the Engineer shall, after due consultation with the Employer and the Contractor, determine the amount the Contractor's costs in respect of such of uncovering, making openings in or through, reinstating and making good the same, which shall be added to the Contract Price, and shall notify the Contractor accordingly, with a copy to the Employer. In any other case all costs shall be borne by the Contractor.

39.1 **Removal of Improper Work, Materials or Plant**

The Engineer shall have authority to issue instructions from time to time, for:

(a) the removal from the Site, within such time or times as may be specified in the instruction, of any materials or Plant which, in the opinion of the Engineer, are not in accordance with the Contract,

(b) the substitution of proper and suitable materials or Plant, and

(c) the removal and proper re-execution, notwithstanding any previous test thereof or interim payment therefore, of any work which, in respect of

(i) materials, Plant or workmanship, or

(ii) design by the Contractor or for which he is responsible,

is not, in the opinion of the Engineer, in accordance with the Contract.

39.2 **Default of Contractor in Compliance**

In case of default on the part of Contractor in carrying out such instruction within the time specified therein or, if none, within a reasonable time, the Employer shall be entitled to employ and pay other persons to carry out the same and all costs consequent thereon or incidental thereto shall, after due consultation with the Employer and the Contractor, be determined by the Engineer and shall be recoverable from the Contractor by the Employer, and may be deducted by the Employer from any monies due or to become due to the Contractor and the Engineer shall notify the Contractor accordingly, with a copy to the Employer.

Suspension

40.1 **Suspension of Work**

The Contractor shall, on the instructions of the Engineer, suspend the progress of the Works or any part thereof for such time and in such manner as the Engineer may consider necessary and shall, during such suspension, properly protect and secure the Works or such part thereof so far as is necessary in the opinion of the Engineer. Unless such suspension is:

(a) otherwise provided for in the Contract,

(b) necessary by reason of some default of or breach of contract by the Contractor or for which he is responsible,

(c) necessary by reason of climatic conditions of the Site, or

(d) necessary for the proper execution of the Works or for the safety of the Works or any part thereof (save to the extent that such necessity arises from any act or default by the Engineer or the Employer or from any of the risks defined in Sub-Clause 20.4), Sub-Clause 40.2 shall apply.

40.2 **Engineer's Determination following Suspension**

Where, if specifically mentioned in the SCC, pursuant to Sub-Clause 40.1, this Sub-Clause applies the Engineer shall, after due consultation with the Employer and the Contractor, determine:

(a) any extension of time to which the Contractor is entitled under Clause 44, and

(b) the amount, which shall be added to the Contract Price, in respect of the cost incurred by the Contractor by reason of such suspension,

and shall notify the Contractor accordingly, with a copy to the Employer *{inclusion of this clause is to be decided by the procuring agency}*.

40.3 **Suspension lasting more than 84 Days**

If the progress of the Works or any part thereof is suspended on the written instructions of the Engineer and if permission to resume work is not given by the Engineer within a period for 84 days from the date of suspension then, unless such suspension is within paragraph (a), (b), (c) or (d) of Sub-Clause 40.1, the Contractor may give notice to the Engineer requiring permission, within 30 days from the receipt thereof, to proceed with the Works or that part thereof in regard to which progress is suspended. If, within the said time, such permission is not granted, the Contractor may, but is not bound to, elect to treat the suspension, where it affects part only of the Works, as an omission of such part under Clause 51 by giving a further notice to the Engineer to that effect, or, where it affects the whole of the Works, treat the suspension as an event of default by the Employer and terminates his employment under the Contract in accordance with the provisions of Sub-Clause 69.1, whereupon the provisions of Sub-Clause 69.2 and 69.3 shall apply. The above course may be adopted if specifically given in the SCC.

Commencement and Delays

41.1 **Commencement of Works**

The Contractor shall commence the Works as soon as is reasonably possible after the receipt by him of notice to this effect from the Engineer, which notice shall be issued within the time stated in the Appendix to Tender after the date of the Letter of Acceptance. Thereafter, the Contractor shall proceeded with the Works with due expedition and without delay.

42.1 **Possession of Site and Access Thereto**

Save insofar as the Contract may prescribe:

(a) the extent of portions of the Site of which the Contractor is to be given possession from time to time,

(b) the order in which such portions shall be made available to the Contractor,

and, subject to any requirement in the Contract as to the order in which the Works shall be executed, the Employer will, with the Engineer's notice to commence the Works, give to the Contractor possession of

(c) so much of the Site, and

(d) such access as, in accordance with the Contract, is to be provided by the Employer as may be required to enable the Contractor to commence and proceed with the execution of the Works in accordance with the programme referred to in Clause 14, if any, and otherwise in accordance with such reasonable proposals as the Contractor shall, by notice to the Engineer with a copy to the Employer, make. The Employer will, from time to time as the Works proceed, give to the Contractor possession of such further portions of the Site as may be required to enable the Contractor to proceed with the execution of the Works with due dispatch in accordance with such programme or proposals, as the case may be.

42.2 **Failure to Give Possession**

If the Contractor suffers delay and/or incurs costs from failure on the part of the Employer to give possession in accordance with the terms of Sub-Clause 42.1, the Engineer may, after due consultation with the Employer and the Contractor, determine:

(a) any extension of time to which the Contractor is entitled under Clause 44, and

(b) the amount of such costs, which shall be added to the Contract Price,

and shall notify the Contractor accordingly, with a copy to the Employer.

{inclusion of this clause is to be decided by the procuring agency}.

42.3 **Rights of Way and Facilities**

The Contractor shall bear all costs and charges for special or temporary wayleaves required by him in connection with access to the Site. The Contractor shall also provide at his own

cost any additional facilities outside the Site required by him for the purposes of the Works.

43.1 **Time for Completion**

The whole of the Works and, if applicable, any Section required to be completed within a particular time as stated in the Appendix to Tender, shall be completed, in accordance with the provisions of Clause 48, within the time stated in the Appendix to Tender for the whole of the Works or the Section (as the case may be), calculated from the Commencement Date, or such extended time as may be allowed under Clause 44.

44.1 **Extension of Time for Completion**

In the event of:

(a) the amount or nature of extra or additional work,

(b) any cause of delay referred to in these Conditions,

(c) exceptionally adverse climatic conditions,

(d) any delay, impediment or prevention by the Employer, or

(e) other special circumstances which may occur, other than through a default of or breach of contract by the Contractor or for which he is responsible,

Being such as fairly to entitle the Contractor to an extension of the Time for Completion of the Works, or any Section or part thereof, the Engineer shall, after due consultation with the Employer and the Contractor, determine the amount of such extension and shall notify the Contractor accordingly, with a copy to the Employer.

44.2 **Contractor to Provide Notification and Detailed Particulars**

Provided that the Engineer is not bound to make any determination unless the Contractor has

(a) within 30 days after such event has first arisen notified the Engineer with a copy to the Employer, and

(b) within 30 days or such other reasonable time as may be agreed by the Engineer, after such notification submitted to the Engineer detailed particulars of any extension of time to which he may consider himself entitled in order that such submission may be investigated at the time.

44.3 **Interim Determination of Extension**

Provided also that where an event has a continuing effect such that it is not practicable for the Contractor to submit detailed particulars within the period of 30 days referred to in Sub-Clause 44.2(b), he shall nevertheless be entitled to an extension of time provided that he has submitted to the Engineer interim particulars at intervals of not more than 30 days and final particulars within 30 days of the end of the effects resulting from the event. On receipt of such interim particulars, the Engineer shall, without undue delay, make an interim determination of extension of time and, on receipt of the final particulars, the Engineer shall review all the circumstances and shall determine an overall extension of time in regard to the event. In both such cases the Engineer shall make his determination after due consultation with the Employer and the Contractor and shall notify the Contractor of the determination, with a copy to the Employer. No final review shall result in a decrease of any extension of time already determined by the Engineer.

45.1 **Restriction on Working Hours**

Subject to any provision to the contrary contained in the Contract, none of the Works shall, save as hereinafter provided, be carried on during the night or on locally recognised days of rest without the consent of the Engineer, except when work is unavoidable or absolutely necessary for the saving of life or property or for the safety of the Works, in which case the Contractor shall immediately advise the Engineer. Provided that the provisions of this Clause shall not be applicable in the case of any work which it is customary to carry out by multiple shifts.

46.1 **Rate of Progress**

If for any reason, which does not entitle the Contractor to an extension of time, the rate of progress of the Works or any Section is at any time, in the opinion of the Engineer, too slow to comply with the Time for Completion, the Engineer shall so notify the Contractor who shall thereupon take such steps as are necessary, subject to the consent of the Engineer, to expedite progress so as to comply with the Time for Completion. The Contractor shall not be entitled to any additional payment for taking such steps. If, as a result of any notice given by the Engineer under this Clause, the Contractor considers that it is necessary to do any work at night or on locally recognised days of rest, he shall be entitled to seek the consent of the Engineer so to do. Provided that if any steps, taken by the Contractor in meeting his obligations under this Clause, involve the Employer in additional supervision costs, such cost shall, after due consultation with the Employer and the Contractor, be determined by the Engineer and shall be recoverable from the Contractor by the Employer, and may be deducted by the Employer from any monies due or to become due to the Contractor and the Engineer shall notify the Contractor accordingly, with a copy to the Employer.

47.1 **Liquidated Damages for Delay**

If the Contractor fails to comply with the Time for Completion in accordance with Clause 48, for the whole of the Works or, if applicable, any Section within the relevant time prescribed by Clause 43, then the Contractor shall pay to the Employer the relevant sum stated in the Appendix to Tender as liquidated damages for such default and not as a penalty (which sum shall be the only monies due from the Contractor for such default) for every day or part of a day which shall elapse between the relevant Time for Completion and the date stated in a Taking-Over Certificate of the whole of the Works or the relevant Section, subject to the applicable limit stated in the Appendix to Tender. The Employer may, without prejudice to any other method of recovery, deduct the amount of such damages from any monies due or to become due to the Contractor. The payment or deduction of such damages shall not relieve the Contractor from his obligation to complete the Works, or from any other of his obligations and liabilities under the Contract.

47.2 **Reduction of Liquidated Damages**

If, before the Time for Completion of the whole of the Works or, if applicable, any Section, a Taking-Over Certificate has been issued for any part of the Works or of a Section, the liquidated damages for delay in completion of the remainder of the Works or of that Section shall, for any period of delay after the date stated in such Taking-Over Certificate, and in the absence of Alternative provisions in the Contract, be reduced in the proportion which the value of the part so certified bears to the value of the whole of the Works or Section, as applicable. The provisions of this Sub-Clause shall only apply to the rate of liquidated damages and shall not affect the limit thereof.

48.1 **Taking-Over Certificate**

When the whole of the Works have been substantially completed and have satisfactorily passed any Tests on Completion prescribed by the Contract, the Contractor may give a notice to that effect to the Engineer with a copy to the Employer, accompanied by a written undertaking to finish with due expedition any outstanding work during the Defects Liability Period. Such notice and undertaking shall be deemed to be a request by the Contractor for the Engineer to issue a Taking-Over Certificate in respect of the Works. The Engineer shall within 21 days of the date of delivery of such notice, either issue to the Contractor, with a copy to the Employer, a Taking-Over Certificate, stating the date on which, in his opinion, the Works were substantially completed in accordance with the Contract, or give instructions in writing to the Contractor specifying all the work which, in the Engineer's opinion, is required to be done by the Contractor before the issue of such Certificate. The Engineer shall also notify the Contractor of any defects in the Works affecting substantial completion that may appear after such instructions and before completion of the Woks specified therein. The Contractor shall be entitled to receive such Taking-Over Certificate

within 21 days of completion, to the satisfaction of the Engineer, of the Works so specified and remedying any defects so notified.

48.2 **Taking Over of Sections or Parts**

Similarly, in accordance with the procedure set out in Sub-Clause 48.1, the Contractor may request and the Engineer shall issue a Taking-Over Certificate in respect of:

(a) any Section in respect of which a separate Time for Completion is provided in the Appendix to Tender,

(b) any substantial part of the Permanent Works which has been both completed to the satisfaction of the Engineer and, otherwise than as provided for in the Contract, occupied or used by the Employer, or

(c) any part of the Permanent Works which the Employer has elected to occupy or use prior to completion (where such prior occupation or use is not provided for in the Contract or has not been agreed by the Contractor as a temporary measure).

48.3 **Substantial Completion of Parts**

If any part of the Permanent Works has been substantially completed and has satisfactorily passed any Tests on Completion prescribed by the Contractor, the Engineer may issue a Taking-Over Certificate in respect of that part of the Permanent Works before completion of the whole of the Works and, upon the issue of such Certificate, the Contractor shall be deemed to have undertaken to complete with due expedition any outstanding work in that part of the Permanent Works during the Defects Liability Period.

48.4 **Surfaces Requiring Reinstatement**

Provided that a Taking-Over Certificate given in respect of any Section or part of the Permanent Works before completion of the whole of the Works shall not be deemed to certify completion of any ground or surfaces requiring reinstatement, unless such Taking-Over Certificate shall expressly so state.

Defects Liability

49.1 **Defects Liability Period**

In these Conditions the expression "Defects Liability Period" shall mean the defects liability period named in the Appendix to Tender, calculated from:

(a) the date of completion of the Works certified by the Engineer in accordance with Clause 48, or

(b) in the event of more than one certificate having issued by the Engineer under Clause 48, the respective dates so certified,

and in relation to the Defects Liability Period the expression "the Works" shall be construed accordingly.

49.2 **Completion of Outstanding Work and Remedying Defects**

To the intent that the Works shall, at or as soon as practicable after the expiration of the Defects Liability Period, be delivered to the Employer in the condition required by the Contract, fair wear and tear excepted, to the satisfaction of the Engineer, the Contractor shall:

(a) complete the work, if any, outstanding on the date stated in the Taking-Over Certificate as soon as practicable after such date, and

(b) execute all such work of amendment, reconstruction, and remedying defects, shrinkages or other faults as the Engineer may, during the Defects Liability Period or within 14 days after its expiration, as a result of an inspection made by or on behalf of the Engineer prior to its expiration, instruct the Contractor to execute.

49.3 **Cost of Remedying Defects**

All work referred to in Sub-Clause 49.2(b) shall be executed by the Contractor at his own cost if the necessity thereof is, in the opinion of the Engineer, due to:

(a) the use of materials, Plant or workmanship not in accordance with the Contract,

(b) where the Contractor is responsible for the design of part of the Permanent Works, any fault i n such design, or

(c) the neglect or failure on the part of the Contractor to comply with any obligation, expressed or implied, on the Contractor's part under the Contract.

If, in the opinion of the Engineer, such necessity is due to any other cause, he shall determine an addition to the Contract Price in accordance with Clause 52 and shall notify the Contractor accordingly, with a copy to the Employer.

49.4 **Contractor's Failure to Carry Out Instructions**

In case of default on the part of the Contractor in carrying out such instruction within a reasonable time, the Employer shall be entitled to employ and pay other persons to carry out the same and if such work is work which, in the opinion of the Engineer, the Contractor was liable to do at his own cost under the Contract, then all cost consequent thereon or incidental thereto shall, after due consultation with the Employer and the Contractor, be determined by the Engineer and shall be recoverable from the Contractor by the Employer, and may be deducted by the Employer from any monies due or to become due to the Contractor and the Engineer shall notify the Contractor accordingly, with a copy to the Employer.

50.1 **Contractor to Search**

If any defect, shrinkage or other fault in the Works appears at any time prior to the end of the Defects Liability Period, the Engineer may instruct the Contractor, with a copy to the Employer, to search under the directions of the Engineer for the cause thereof. Unless such defect, shrinkage or other fault is one for which the Contractor is liable under the Contract, the Engineer shall, after due consultation with the Employer and the Contractor, determine the amount in respect of the costs of such search incurred by the Contractor, which shall be added to the Contract Price and shall notify the Contractor accordingly, with a copy to the Employer. If such defect, shrinkage or other fault is one for which the Contractor is liable, the cost of the work carried out in searching as aforesaid shall be borne by the Contractor and he shall in such case remedy such defect, shrinkage or other fault at his own cost in accordance with the provisions of Clause 49.

Alterations, Additions and Omissions

51.1 **Variations**

The Engineer shall make any variation of the form, quality or quantity of the Works or any part thereof that may, in his opinion, be necessary and for that purpose, or if for any other reason it shall, in his opinion, be appropriate, he shall have the authority to instruct the Contractor to do and the Contractor shall do any of the following:

(a) increase or decrease the quantity of any work included in the Contract,

(b) omit any such work (but not if the omitted work is to be carried out by the Employer or by another contractor),

(c) change the character or quality or kind of any such work,

(d) change the levels, lines, position and dimensions of any part of the Works,

(e) execute additional work of any kind necessary for the completion of the Works, or

(f) change any specified sequence or timing of construction of any part of the Works.

No such variation shall in any way vitiate or invalidate the Contract, but the effect, if any, of all such variations shall be valued in accordance with Clause 52. Provided that where the issue of an instruction to vary the Works is necessitated by some default of or breach of contract by the Contractor or for which he is responsible, any additional cost attributable to such default shall be borne by the Contractor.

51.2 **Instructions for Variations**

The Contractor shall not make any such variation without an instruction of the Engineer. Provided that no instruction shall be required for increase or decrease in the quantity of any work where such increase or decrease is not the result of an instruction given under this Clause, but is the result of the quantities exceeding or being less than those stated in the Bill of Quantities.

52.1 **Valuation of Variations**

All variations referred to in Clause 51 and any additions to the Contract Price which are required to be determined in accordance with Clause 52 (for the purposes of this Clause referred to as "varied work"), shall be valued at the rates and prices set out in the Contract if, in the opinion of the Engineer, the same shall be applicable. If the Contract does not contain any rates or prices applicable to the varied work, the rates and prices in the Contract shall be used as the basis for valuation so far as may be reasonable, failing which, after due consultation by the Engineer with the Employer and the Contractor, suitable rates or prices shall be agreed upon between the Engineer and the Contractor. In the event of disagreement the Engineer shall fix such rates or prices as are, in his opinion, appropriate and shall notify the Contractor accordingly, with a copy to the Employer. Until such time as rates or prices are agreed or fixed, the Engineer shall determine provisional rates or prices to enable on-account payments to be included in certificates issued in accordance with Clause 60.

52.2 **Power of Engineer to Fix Rates**

Provided that if the nature or amount of any varied work relative to the nature or amount of the whole of the Works or to any part thereof, is such that, in the opinion of the Engineer, the rate or price contained in the Contract for any item of the Works is, by reason of such varied work, rendered inappropriate or inapplicable, then, after due consultation by the Engineer with the Employer and the Contractor, a suitable rate or price shall be agreed upon between the Engineer and the Contractor. In the event of disagreement the Engineer shall fix such other rate or price as is, in his opinion, appropriate and shall notify the Contractor accordingly, with a copy to the Employer. Until such time as rates or prices are agreed or fixed, the Engineer shall determine provisional rates or prices to enable on-account payments to be included in certificates issued in accordance with Clause 60.

Provided also that no varied work instructed to be done by the Engineer pursuant to Clause 51 shall be valued under Sub-Clause 52.1 or under this Sub-Clause unless, within 14 days of the date of such instruction and, other than in the case of omitted work, before the commencement of the varied work, notice shall have been given either:

(a) by the Contractor to the Engineer of his intention to claim extra payment or a varied rate or price, or

(b) by the Engineer to the Contractor of his intention to vary a rate or price.

52.3 **Variations Exceeding 15 per cent**

If, on the issue of the Taking-Over Certificate for the whole of the Works, it is found that as a result of:

(a) all varied work valued under Sub-Clauses 52.1 and 52.2, and

(b) all adjustments upon measurement of the estimated quantities set out in the Bill of Quantities, excluding Provisional Sums, dayworks and adjustment of price made under Clause 70.

but not from any other cause, there have been additions to or deductions from the Contract Price which taken together are in excess of 15 per cent of the "Effective Contract Price" (which for the purposes of this Sub-Clause shall mean the Contract Price, excluding Provisional Sums and allowance for dayworks, if any) then and in such event (subject to any action already taken under any other Sub-Clause of this Clause), after due consultation by the Engineer with the Employer and the Contractor, there shall be added to or deducted from

the Contract Price such further sums as may be agreed between the Contractor and the Engineer or, failing agreement, determined by the Engineer having regard to the Contractor's Site and general overhead costs of the Contract. The Engineer shall notify the Contractor of any determination made under this Sub-Clause, with a copy to the Employer. Such sum shall be based only on the amount by which such additions or deductions shall be in excess of 15 per cent of the Effective Contract Price.

52.4 **Daywork**

The Engineer may, if in his opinion it is necessary or desirable, issue an instruction that any varied work shall be executed on a daywork basis. The Contractor shall then be paid for such varied work under the terms set out in the daywork schedule included in the Contract and at the rates and prices affixed thereto by him in the Tender.

The Contractor shall furnish to the Engineer such receipts or other vouchers as may be necessary to provide the amounts paid and, before ordering material, shall submit to the Engineer quotations for the same for his approval.

In respect of such of the Works executed on a daywork basis , the Contractor shall during the continuance of such work, deliver each day to the Engineer an exact list in duplicate of the names, occupation and time of all workmen employed on such work and a statement, also in duplicate, showing the description and quantity of all materials and Contractor's Equipment used thereon or therefore other than Contractor's Equipment which is included in the percentage addition in accordance with such daywork schedule. One copy of each list and statement will, if correct, or when agreed, be signed by the Engineer and returned to the Contractor.

At the end of each month the Contractor shall deliver to the Engineer a priced statement of the labour, materials and Contractor's Equipment, except as aforesaid, used and the Contractor shall not be entitled to any payment unless such lists and statements have been fully and punctually rendered. Provided always that if the Engineer considers that for any reason the sending of such lists or statements by the Contractor, in accordance with the foregoing provision, was impracticable he shall nevertheless be entitled to authorise payment for such work, either as daywork, on being satisfied as to the time employed and the labour, materials and Contractor’s Equipment used on such work, or at such value therefore as shall, in his opinion, be fair and reasonable.

Procedure for Claims

{inclusion of any one or all of the following clauses 53.1 to 53.5 is to be decided by the procuring agency}.

53.1 **Notice of Claims**

Notwithstanding any other provision of the Contract, if the Contractor intends to claim any additional payment pursuant to any Clause of these Conditions or otherwise, he shall give notice of his intention to the Engineer with a copy to the Employer, within 30 days after the event giving rise to the claim has first arisen; provided this is expressly provided in the SCC.

53.2 **Contemporary Records**

Upon the happening of the event referred to in Sub-Clause 53.1, the Contractor shall keep such contemporary records as may reasonably be necessary to support any claim he may subsequently wish to make. Without necessarily admitting the Employer's liability, the Engineer shall, on receipt of a notice under Sub-Clause 53.1, inspect such contemporary records and may instruct the Contractor to keep any further contemporary records as are reasonable and may be material to the claim of which notice has been given. The Contractor shall permit the Engineer, the Employer and the Administrative Department, to inspect all records kept pursuant to this Sub-Clause and shall supply him with copies thereof as and when the Engineer so instructs.

53.3 **Substantiation of Claims**

Within 30 days, or such other reasonable time as may be agreed by the Engineer, of giving notice under Sub-Clause 53.1, the Contractor shall send to the Engineer an account giving detailed particulars of the amount claimed and the grounds upon which the claim is based; provided this is expressly provided in the SCC. Where the event giving rise to the claim has a continuing effect, such account shall be considered to be an interim account and the Contractor shall, at such intervals as the Engineer may reasonably require, send further interim accounts giving the accumulated amount of the claim and any further grounds upon which it is based. In cases where interim accounts are sent to the Engineer, the Contractor shall send a final account within 30 days of the end of the effects resulting from the event. The Contractor shall send a copy to the Employer and the Administrative Department all accounts sent to the Engineer pursuant to this Sub-Clause.

53.4 **Failure to Comply**

If the Contractor fails to comply with any of the provisions of this Clause in respect of any claim which he seeks to make, his entitlement to payment in respect thereof shall not exceed such amount as the Engineer or any arbitrator or arbitrators appointed pursuant to Sub-Clause 67.3 assessing the claim considers to be verified by contemporary records (whether or not such records were brought to the Engineer's notice as required under Sub-Clause 53.2 and 53.3).

53.5 **Payment of Claims**

The Contractor shall be entitled to have included in any interim payment certified by the Engineer pursuant to Clause 60 such amount in respect of any claim as the Engineer, after due consultation with the Employer and the Contractor, may consider due to the Contractor provided that the Contractor has supplied sufficient particulars to enable the Engineer to determine the amount due. If such particulars are insufficient to substantiate the whole of the claim, the Contractor shall be entitled to payment in respect of such part of the claim as such particulars may substantiate to the satisfaction of the Engineer. The Engineer shall notify the Contractor of any determination made under this Sub-Clause, with a copy to the Employer.

Contractor's Equipment, Temporary Works and Materials

54.1 **Contractor's Equipment, Temporary Works and Materials; Exclusive Use for the Works**

All Contractor's Equipment, Temporary Works and materials provided by the Contractor shall, when brought on to the Site, be deemed to be exclusively intended for the execution of the Works and the Contractor shall not remove the same or any part thereof, except for the purpose of moving it from one part of the Site to another, without the consent of the Engineer. Provided that consent shall not be required for vehicles engaged in transporting any staff, labour, Contractor's Equipment, Temporary Works, Plant or materials to or from the Site.

54.2 **Employer not Liable for Damage**

The Employer shall not at any time be liable, save as mentioned in Clauses 20 and 65, for the loss of or damage to any of the said Contractor's Equipment, Temporary Works or materials.

54.3 **Customs Clearance**

The Employer will use his best endeavours in assisting the Contractor, where required, in obtaining clearance through the Customs of Contractor's Equipment, materials and other things required for the Works.

54.4 **Re-export of Contractor's Equipment**

In respect of any Contractor's Equipment which the Contractor has imported for the purposes of the Works, the Employer will use his best endeavours to assist the Contractor, where required, in procuring any necessary Government consent to the re-export of such

Contractor's Equipment by the Contractor upon the removal thereof pursuant to the terms of Contract.

54.5 **Conditions of Hire of Contractor's Equipment**

With a view to securing, in the event of termination under Clause 63, the continued availability, for the purpose of executing the Works, of any hired Contractor's Equipment, the Contractor shall not bring on to the Site any hired Contractor's Equipment unless there is an agreement for hire thereof (which agreement shall be deemed not to include an agreement for hire purchase) which contains a provision that the owner thereof will, on request in writing made by the Employer within 7 days after the date on which any termination has become effective, and on the Employer undertaking to pay all hire charges in respect thereof from such date, hire such Contractor's Equipment to the Employer on the same terms in all respect as the same was hired to the Contractor save that the Employer shall be entitled to permit the use thereof by any other contractor employed by him for the purpose of execution and completing the Works and remedying any defects therein, under the terms of the said Clause 63.

54.6 **Costs for the Purpose of Clause 63**

In the event of the Employer entering into any agreement for the hire of Contractor's Equipment pursuant to Sub-Clause 54.5, all sums properly paid by the Employer under the provision of any such agreement and all costs incurred by him (including stamp duties) in entering into such agreement shall be deemed, for the purpose of Clause 63, to be part of the cost of executing and completing the Works and the remedying of any defects therein.

54.7 **Incorporation of Clause in Subcontracts**

The Contractor shall, where entering into any subcontract for the execution of any part of the Works, incorporate in such subcontract (by reference or otherwise) the provisions of this Clause in relation to Contractor's Equipment, Temporary Works or materials brought on to the Site by the Subcontractor.

54.8 **Approval of Materials not Implied**

The operation of this Clause shall not be deemed to imply any approval by the Engineer of the materials or other matters referred to therein nor shall it prevent the rejection of any such materials at any time by the Engineer.

Measurement

55.1 **Quantities**

The quantities set out in the Bill of Quantities are the estimated quantities for the Works, and they are not to be taken as the actual and correct quantities of the Works to be executed by the Contractor in fulfillment of his obligations under the Contract.

56.1 **Works to be Measured**

The Engineer shall, except as otherwise stated, ascertain and determine by measurement the value of the Works in accordance with the Contract and the Contractor shall be paid that value in accordance with Clause 60. The Engineer shall, when he requires any part of the Works to be measured, give reasonable notice to the Contractor's authorised agent, who shall:

(a) forthwith attend or send a qualified representative to assist the Engineer in making such measurement, and

(b) supply all particulars required by the Engineer.

Should the Contractor not attend, or neglect or omit to send such representative, then the measurement made by the Engineer or approved by him shall be taken to be the correct measurement of such part of the Works. For the purpose of measuring such Permanent Works as are to be measured by records and drawings, the Engineer shall prepare records

and drawings as the work proceeds and the Contractor, as and when called upon to do so in writing, shall, within 14 days, attend to examine and agree such records and drawings with the Engineer and shall sign the same when so agreed. If the Contractor does not attend to examine and agree such records and drawings, they shall be taken to be correct. If, after examination of such records and drawings, the Contractor does not agree the same or does not sign the same as agreed, they shall nevertheless be taken to be correct, unless the Contractor, within 14 days of such examination, lodges with the Engineer notice of the respects in which such records and drawings are claimed by him to be incorrect. On receipt of such notice, the Engineer shall review the records and drawings and either confirm or vary them.

57.1 **Method of Measurement**

The Works shall be measured net, notwithstanding any general or local custom, except where otherwise provided for in the Contract.

57.2 **Breakdown of Lump Sum Items**

For the purposes of statements submitted in accordance with Sub-Clause 60.1, the Contractor shall submit to the Engineer, within 30 days after the receipt of the Letter of Acceptance, a breakdown for each of the lump sum items contained in the Tender. Such breakdowns shall be subject to the approval of the Engineer.

Provisional Sums

58.1 **Definition of "Provisional Sum"**

"Provisional Sum" means a sum included in the Contract and so designated in the Bill of Quantities for the execution of any part of the Works or for the supply of goods, materials, Plant or services, or for contingencies, which sum may be used, in whole or in part, or not at all, on the instructions of the Engineer. The Contractor shall be entitled to only such amounts in respect of the work, supply or contingencies to which such Provisional Sums relate as the Engineer shall determine in accordance with this Clause. The Engineer shall notify the Contractor of any determination made under this Sub-Clause, with a copy to the Employer.

58.2 **Use of Provisional Sums**

In respect of every Provisional Sum the Engineer shall have authority to issue instructions for the execution of work or for the supply of goods, material, Plant or services by:

(a) the Contractor, in which case the Contractor shall be entitled to an amount equal to the value thereof determined in accordance with Clause 52, and

(b) a nominated Subcontractor, as hereinafter defined, in which case the sum to be paid to the Contractor therefore shall be determined and paid in accordance with Sub-Clause 59.4.

58.3 **Production of Vouchers**

The Contractor shall produce to the Engineer all quotations, invoices, vouchers and accounts or receipts in connection with expenditure in respect of Provisional Sums, except where work is valued in accordance with rates or prices set out in the Tender.

Nominated Subcontractors

59.1 **Definition of "Nominated Subcontractors"**

All specialists, merchants, tradesmen and others executing any work or supplying any goods, materials, Plant or services for which Provisional Sums are included in the Contract, who may have been or be nominated or selected or approved by the Employer or the Engineer, and all persons to whom by virtue of the provisions of the Contract the Contractor is required to subcontract shall, in the execution of such work or the supply of such goods, materials, Plant or services, be deemed to be subcontractors to the Contractor and are referred to in this Contract as "nominated Subcontractors".

59.2 **Nominated Subcontractors; Objection to Nomination**

The Contractor shall not be required by the Employer or the Engineer, or be deemed to be under any obligation, to employ any nominated Subcontractor against whom the Contractor may raise reasonable objection, or who declines to enter into subcontract with the Contractor containing provisions:

(a) that in respect of the work, goods, materials, Plant or services the subject of the subcontract, the nominated Subcontractor will undertake towards the Contractor such obligations and liabilities as will enable the Contractor to discharge his own obligations and liabilities towards the Employer under the terms of the Contract and will save harmless and indemnify the Contractor from and against the same and from all claims, proceedings, damages, costs, charges and expenses whatsoever arising out of or in connection therewith, or arising out of or in connection with any failure to perform such obligations or to fulfill such liabilities, and

(b) that the nominated Subcontractor will save harmless and indemnity the Contractor from and against any negligence by the nominated Subcontractor, his agents, workmen and servants and from and against any misuse by him or them of any Temporary Works provided by the Contractor for the purposes of the Contract and from all claims as aforesaid.

59.3 **Design Requirements to be Expressly Stated**

If in connection with any Provisional Sum the services to be provided include any matter of design or specification of any part of the Permanent Works or of any Plant to be incorporated therein, such requirement shall be expressly stated in the Contract and shall be included in any nominated Subcontract. The nominated Subcontract shall specify that the nominated Subcontractor providing such services will save harmless and indemnify the Contractor from and against the same and from all claims, proceedings, damages, costs, charges and expenses whatsoever arising out of or in connection with any failure to perform such obligations or to fulfill such liabilities.

59.4 **Payments to Nominated Subcontractors**

For all work executed or goods, materials, Plant or services supplied by any nominated Subcontractor, the Contractor shall be entitled to:

(a) the actual price paid or due to be paid by the Contractor, on the instructions of the Engineer, and in accordance with the subcontract;
(b) in respect of labour supplied by the Contractor, the sum, if any, entered in the Bill of Quantities or, if instructed by the Engineer pursuant to paragraph (a) of Sub-Clause 58.2, as may be determined in accordance with Clause 52; and

(c) in respect of all other charges and profit, a sum being a percentage rate of the actual price paid or due to be paid calculated, where provision has been made in the Bill of Quantities for a rate to be set against the relevant Provisional Sum, at the rate inserted by the Contractor against that item or, where no such provision has been made, at the rate inserted by the Contractor in the Appendix to Tender and repeated where provision for such is made in a special item provided in the Bill of Quantities for such purpose.

59.5 **Certification of Payments to Nominated Subcontractors**

Before issuing, under Clause 60 any certificate, which includes any payment in respect of work done or goods, materials, Plant or services supplied by any nominated Subcontractor, the Engineer shall be entitled to demand from the Contractor reasonable proof that all payments, less retentions, included in previous certificates in respect of the work or goods, materials, Plant or services of such nominated Subcontractor have been paid or discharged by the Contractor. If the Contractor fails to supply such proof then, unless the Contractor:

(a) satisfies the Engineer in writing that he has reasonable cause for withholding or refusing to make such payment, and

(b) produces to the Engineer reasonable proof that he has so informed such nominated Subcontractor in writing,

the Employer shall be entitled to pay to such nominated Subcontractor direct, upon the certificate of the Engineer, all payments, less retention, provided for in the nominated Subcontract, which the Contractor has failed to make to such nominated Subcontractor and to deduct by way of set-off the amount so paid by the Employer from any sums due or to become due from the Employer to the Contractor.

Provided that, where the Engineer has certified and the Employer has paid direct as aforesaid, the Engineer shall in issuing any further certificate in favour of the Contractor, deduct from the amount thereof the amount so paid, direct as aforesaid, but shall not withhold or delay the issue of the certificate itself when due to be issued under the terms of the Contract.

Certificates and Payment

60.1 **Monthly Statements**

The Contractor shall submit to the Engineer after the end of each month six copies for further process, and one copy each to the Employer and the Administrative Department, each signed by the Contractor's representative approved by the Engineer in accordance with the Sub-Clause 15.1, of a statement, in such form as the Engineer may from time to time prescribe, showing the amounts to which the Contractor considers himself to be entitled up to the end of the month in respect of:

(a) the value of the Permanent Works executed,

(b) any other items in the Bill of Quantities including those for Contractor's Equipment, Temporary Works, dayworks and the like,

(c) the percentage of the invoice value of listed materials, all as stated in the Appendix to Tender, and Plant delivered by the Contractor on the Site for incorporation in the Permanent Works but not incorporated in such Works,

(d) adjustments under Clause 70, and

(e) any other sum to which the Contractor may be entitled under the Contract or otherwise.

60.1 Terms of Payments

The quantities given in the BOQ are merely estimation. Payment to the Contractor shall be made as per actual work done dully verified by the Engineer In charge of the project" The minimum value of IPC shall be 25 % of the value of work done.

60.3 Payment of Retention Money

(a) Upon the issue of the Taking-Over Certificate with respect to the whole of the Works, one half of the Retention Money, or upon the issue of a Taking-Over Certificate with respect to a Section or part of the Permanent

Works only such proportion thereof as the Engineer determines having regard to the relative value of such Section or part of the Permanent Works, shall be certified by the Engineer for payment to the Contractor.

(b) Upon the expiration of the Defects Liability Period for the Works the other half of the Retention Money shall be certified by the Engineer for payment to the Contractor. Provided that, in the event of different Defects Liability Periods having become applicable to different Sections or part of the Permanent Works pursuant to Clause 48, the expression "expiration of the Defects Liability Period" shall, for the purposes of this Sub-Clause, be deemed to mean the expiration of the latest of such periods. Provided also that if at such time, there shall remain to be executed by the Contractor any work instructed, pursuant to Clause 49 and 50, in respect of the Works, the Engineer shall be entitled to withhold certification until completion of such work of so much of the balance of the Retention Money as shall, in the opinion of the Engineer, represent the cost of the work remaining to be executed.

60.4 **Correction of Certificates**

The Engineer may by any Interim Payment Certificate make any correction or modification in any previous certificate which shall have been issued by him and shall have authority, if any work is not being carried out to his satisfaction, to omit or reduce the value of such work in any Interim Payment Certificate.

60.5 **Statement at Completion**

Not later than 84 days after the issue of the Taking-Over Certificate in respect of the whole of the Works, the Contractor shall submit to the Engineer a Statement at Completion with supporting documents showing in detail, in the form approved by the Engineer:

(a) the final value of all work done in accordance with the Contract up to the date stated in such Taking-Over Certificate,

(b) any further sums which the Contractor considers to be due, and

(c) an estimate of amounts which the Contractor considers will become due to him under the Contract.

The estimated amounts shall be shown separately in such Statement at Completion. The Engineer shall verify payment in accordance with Sub-Clause 60.2.

60.6 **Final Statement**

Not later than 56 days after the issue of the Defects Liability Certificate pursuant to Sub-Clause 62.1, the Contractor shall submit to the Engineer for consideration a draft final statement with supporting documents showing in detail, in the form approved by the Engineer:

(a) the value of all work done in accordance with the Contract, and

(b) any further sums which the Contractor considers to be due to him under the Contract.

If the Engineer disagrees with or cannot verify any part of the draft final statement, the Contractor shall submit such further information as the Engineer may reasonably require and shall make such changes in the draft as may be agreed between them. The Contractor shall then prepare and submit to the Engineer the final statement as agreed (for the purposes of these Conditions referred to as the "Final Statement").

If, following discussions between the Engineer and the Contractor and any changes to the

draft final statement which may be agreed between them, it becomes evident that a dispute exists, the Engineer shall deliver to the Employer an Interim Payment Certificate for those parts of the draft final statement, if any, which are not in dispute. The dispute may then be settled in accordance with Clause 67.

60.7 **Discharge**

Upon submission of the Final Statement, the Contractor shall give to the Employer, with a copy to the Engineer, a written discharge confirming that the total of the Final Statement represents full and final settlement of all monies due to the Contractor arising out of or in respect of the Contract. Provided that such discharge shall become effective only after payment due under the Final Payment Certificate issued pursuant to Sub-Clause 60.8 has been made and the performance security referred to in Sub-Clause 10.1, if any, has been returned to the Contractor.

60.8 **Final Payment Certificate**

Within 30 days after receipt of the Final Statement, and the written discharge, the Engineer shall issue to the Employer (with a copy to the Contractor) a Final Payment Certificate stating:

(a) the amount which, in the opinion of the Engineer, is finally due under the Contract or otherwise, and

(b) after giving credit to the Employer for all amounts previously paid by the Employer and for all sums to which the Employer is entitled other than under Clause 47, the balance, if any, due from the Employer to the Contractor or from the Contractor to the Employer as the case may be.

60.9 **Cessation of Employer's Liability**

The Employer shall not be liable to the Contractor for any matter or thing arising out of or in connection with the Contract or execution of the Works, unless the Contractor shall have included a claim in respect thereof in his Final Statement and (except in respect of matters or things arising after the issue of the Taking-Over Certificate in respect of the whole of the Works) in the Statement at Completion referred to in Sub-Clause 60.5.

60.10 **Time for Payment**

The amount due to the Contractor under any Interim Payment Certificate or final payment issued by the Engineer pursuant to this Clause, or to any other term of the Contract, shall, subject to Clause 47, be paid by the Employer to the Contractor within 30 days after such Interim Payment Certificate or final payment has been delivered to the Employer, provided the work is satisfactory.

61.1 **Approval only by Defects Liability Certificate**

Only the Defects Liability Certificate, referred to in Clause 62, shall be deemed to constitute approval of the Works.

62.1 **Defects Liability Certificate**

The Contract shall not be considered as completed until a Defects Liability Certificate shall have been signed by the Engineer and delivered to the Employer, with a copy to the Contractor, stating the date on which the Contractor shall have completed his obligations to execute and complete the Works and remedy any defects therein to the Engineer's satisfaction. The Defects Liability Certificate shall be given by the Engineer within 30 days after the expiration of the Defects Liability Period, or, if different defects liability periods shall become applicable to different Sections or parts of the Permanent Works, the expiration of the latest such period, or as soon thereafter as any works instructed, pursuant to Clause 49 and 50, have been completed to the satisfaction of the Engineer. Provided that the issue of the Defects Liability Certificate shall not be a condition precedent to payment to the Contractor of the second portion of the Retention Money in accordance

with the conditions set out in Sub-Clause 60.3.

62.2 **Unfulfilled Obligations**

Notwithstanding the issue of the Defects Liability Certificate the Contractor and the Employer shall remain liable for the fulfillment of any obligation incurred under the provisions of the Contract prior to the issue of the Defects Liability Certificate which remains unperformed at the time of such Defects Liability Certificate is issued and, for the purposes of determining the nature and extent of any such obligation, the Contract shall be deemed to remain in force between the parties to the Contract.

Remedies

63.1 **Default of Contractor**

If the Contractor is deemed by law unable to pay his debts as they fall due, or enters into voluntary or involuntary bankruptcy, liquidation or dissolution (other than a voluntary liquidation for the purposes of amalgamation or reconstruction), or becomes insolvent, or makes an arrangement with, or assignment in favour of, his creditors, or agrees to carry out the Contract under a committee of inspection of his creditors, or if a receiver, administrator, trustee or liquidator is appointed over any substantial part of his assets, or if, under any law or regulation relating to reorganization, arrangement or readjustment of debts, proceedings are commenced against the Contractor or resolutions passed in connection with dissolution or liquidation or if any steps are taken to enforce any security interest over a substantial part of the assets of the Contractor, or if any act is done or event occurs with respect to the Contractor or his assets which, under any applicable law has a substantially similar effect to any of the foregoing acts or events, or if the Contractor has contravened Sub-Clause 3.1, or has an execution levied on his goods, or Contract, if the Engineer certifies to the Employer, with a copy to the Contractor, that, in his opinion, the Contractor:

(a) has repudiated the Contract, or

(b) without reasonable excuse has failed

(i) to commence the Works in accordance with Sub-Clause 41.1,

(ii) to proceed with the Works, or any Section thereof, within 30 days after receiving notice pursuant to Sub-Clause 46.1,

(c) has failed to comply with a notice issued pursuant to Sub-Clause 37.4 or an instruction issued pursuant to Sub-Clause 39.1 within 30 days after having received it

(d) despite previous warning from the Engineer, in writing, is otherwise persistently or flagrantly neglecting to comply with any of his obligations under the Contract, or

(e) has contravened Sub-Clause 4.1,

then the Employer may, after giving 14 days' notice to the Contractor, enter upon the Site and the Works and terminate the employment of the Contractor without thereby releasing the Contractor from any of his obligations or liabilities under the Contract, or affecting the rights and authorities conferred on the Employer or the Engineer by the Contract, and may himself complete the Works or may employ any other contractor to complete the Works. The Employer or such other contractor may use for such completion so much of the Contractor's Equipment, Temporary Works and materials as he or they may think proper.

63.2 **Valuation at Date of Termination**

The Engineer shall, as soon as may be practicable after any such entry and termination by the Employer, fix and determine ex parte, or by or after reference to the parties or after

such investigation or enquiries as he may think fit to make or institute, and shall certify:

(a) what amount (if any) had, at the time of such entry and termination, been reasonably earned by or would reasonably accrue to the Contractor in respect of work then actually done by him under the Contract, and

(b) the value of any of the said unused or partially used materials, any Contractor's Equipment and any Temporary Works.

63.3 **Payment after Termination**

If the Employer terminates the Contractor's employment under this Clause, he shall not be liable to pay to the Contractor any further amount (including damages) in respect of the Contract until the expiration of the Defects Liability Period and thereafter until the costs of execution, completion and remedying of any defects, damages for delay in completion (if any) and all other expenses incurred by the Employer have been ascertained and the amount thereof certified by the Engineer. The Contractor shall then be entitled to receive only such sum (if any) as the Engineer may certify would have been payable to him upon due completion by him after deducting the said amount. If such amount exceeds the sum which would have been payable to the Contractor on due completion by him, then the Contractor shall, upon demand, pay to the Employer the amount of such excess and it shall be deemed a debt due by the Contractor to the Employer and shall be recoverable accordingly.

63.4 **Assignment of Benefit of Agreement**

Unless prohibited by law, the Contractor shall, if so instructed by the Engineer within 14 days of such entry and termination referred to in Sub-Clause 63.1, assign to the Employer the benefit of any agreement for the supply of any goods or materials or services and/or for the execution of any work for the purposes of the Contract, which the Contractor may have entered into.

64.1 **Urgent Remedial Work**

If, by reason of any accident, or failure, or other event occurring to, in, or in connection with the Works, or any part thereof, either during the execution of the Works, or during the Defects Liability Period, any remedial or other work is, in the opinion of the Engineer, urgently necessary for the safety of the Works and the Contractor is unable or unwilling at once to do such work, the Employer shall be entitled to employ and pay other persons to carry out such work as the Engineer may consider necessary. If the work or repair so done by the Employer is work which, in the opinion of the Engineer, the Contractor was liable to do at his own cost under the Contract, then all costs consequent thereon or incidental thereto shall, after due consultation with the Employer and the Contractor, be determined by the Engineer and shall be recoverable from the Contractor by the Employer, and may be deducted by the Employer from any monies due or to become due to the Contractor and the Engineer shall notify the Contractor accordingly, with a copy to the Employer. Provided that the Engineer shall, as soon after the occurrence of any such emergency as may be reasonably practicable, notify the Contractor thereof.

Special Risks

65.1 **No Liability for Special Risks**

The Contractor shall be under no liability whatsoever in consequence of any of the special risks referred to in Sub-Clause 65.2, whether by way of indemnity or otherwise, for or in respect of:

(a) destruction of or damage to the Works, save to work condemned under the provisions of Clause 39 prior to the occurrence of any of the said special risks,

(b) destruction of or damage to property, whether of the Employer or third parties, or

(c) injury or loss of life.

65.2 **Special Risks**

The Special Risks are:

(a) the risks defined under paragraphs (a), (c), (d) and (e) of Sub-Clause 20.4, and

(b) the risks defined under paragraph (b) of Sub-Clause 20.4 insofar as these relate to the country in which the Works are to be executed.

65.3 **Damage to Works by Special Risks**

If the Works or any materials or Plant on or near or in transit to the Site, or any of the Contractor's Equipment, sustain destruction or damage by reason of any of the said special risks, the Contractor shall be entitled to payment in accordance with the Contract for any Permanent Works duly executed and for any materials or Plant so destroyed or damaged and, so far as may be required by the Engineer or as may be necessary for the completion of the Works, to payment for:

(a) rectifying any such destruction or damage to the Works, and

(b) replacing or rectifying such materials or Contractor's Equipment,

and the Engineer shall determine an addition to the Contract Price in accordance with Clause 52 (which shall in the case of the cost of replacement of Contractor's Equipment include the fair market value thereof as determined by the Engineer) and shall notify the Contractor accordingly, with a copy to the Employer.

65.4 **Projectile, Missile**

Destruction, damage, injury or loss of life caused by the explosion or impact, whenever and wherever occurring, of any mine, bomb, shell, grenade, or other projectile, missile, munition, or explosive of war, outside the reasonable control of the contractor, shall be deemed to be a consequence of the said special risks, provided the same is not in consequence of any lack of diligence on the part of Contractor.

65.5 **Increased Costs arising from Special Risks**

Save to the extent that the Contractor is entitled to payment under any other provision of the Contract, the Employer shall repay to the Contractor any costs of the execution of the Work (other than such as may be attributable to the cost of reconstructing work condemned under the provisions of Clause 39 prior to the occurrence of any special risk) which are howsoever attributable to or consequent on or the result of or in any way whatsoever connected with the said special risks, subject however to the provisions in this Clause hereinafter contained in regard to outbreak of war, but the Contractor shall, as soon as any such cost comes to his knowledge, forthwith notify the Engineer thereof. The Engineer shall, after due consultation with the Employer and the Contractor, determine the amount of the Contractor's costs in respect thereof which shall be added to the Contract Price and shall notify the Contractor accordingly, with a copy to the Employer.

65.6 **Outbreak of War**

If, during the currency of the Contract, there is an outbreak of war, whether war is declared

or not, in any part of the world which, whether financially or otherwise, materially affects the execution of the Works, the Contractor shall, unless and until the Contract is terminated under the provisions of this Clause, continue to use his best endeavour to complete the execution of the Works. Provided that the Employer shall be entitled, at any time after such outbreak of war, to terminate the Contract by giving notice to the Contractor and, upon such notice being given, the Contract shall, except as to the rights of the parties under this clause and Clause 67, terminate, but without prejudice to the rights of either party in respect of any antecedent breach thereof.

65.7 **Removal of Contractor's Equipment on Termination**

If the Contract is terminated under the provisions of Sub-Clause 65.6, the Contractor shall, with all reasonable dispatch, remove from the Site all Contractor's Equipment and shall give similar facilities to his Subcontractors to do so.

65.8 **Payment if Contract Terminated**

If the Contract is terminated as aforesaid, the Contractor shall be paid by the Employer, insofar as such amounts or items have not already been covered by payments on account made to the Contractor, for all work executed prior to the date of termination at the rates and prices provided in the Contract and in addition:

(a) the amounts payable in respect of any preliminary items referred to in the Bill of Quantities, so far as the work or service comprised therein has been carried out or performed, and a proper portion of any such items which have been partially carried out or performed;

(b) the cost of materials, Plant or goods reasonably ordered for the Works which have been delivered to the Contractor or of which the Contractor is legally liable to accept delivery, such materials, Plant or goods becoming the property of the Employer upon such payments being made by him;

(c) a sum being the amount of any expenditure reasonably incurred by the Contractor in the expectation of completing the whole of the Works insofar as such expenditure has not been covered by any other payments referred to in this Sub-Clause;

(d) any additional sum payable under the provisions of Sub-Clauses 65.3 and 65.5;

(e) such proportion of the cost as may be reasonable, taking into account payments made or to be made for work executed, of removal of Contractor's Equipment under Sub-Clause 65.7 and, if required by the Contractor, return thereof to the Contractor's main plant yard in his country of registration or to other destination, at no greater cost; and

(f) the reasonable cost of repatriation of all the Contractor’s staff and workmen employed on or in connection with the Works at the time of such termination.

Provided that against any payment due from the Employer under this Sub-Clause, the Employer shall be entitled to be credited with any outstanding balances due from the Contractor for advances in respect of Contractor's Equipment, materials and Plant and any other sums which, at the date of termination, were recoverable by the Employer from the Contractor under the terms of Contract. Any sums payable under this Sub-Clause shall, after due consultation with the Employer and the Contractor, be determined by the Engineer who shall notify the Contractor accordingly, with a copy to the Employer.

Release from Performance

66.1 **Payment in Event of Release from Performance**

If any circumstance outside the control of both parties arises after the issue of the Letter of Acceptance which renders it impossible or unlawful for either party to fulfill his or their contractual obligations, or under the law governing the Contract the parties are released

from further performance, then the parties shall be discharged from the Contract, except as to their rights under this Clause and Clause 67 and without prejudice to the rights of either party in respect of any antecedent breach of the Contract, and the sum payable by the Employer to the Contractor in respect of the work executed shall be the same as that which would have been payable under Clause 65 if the Contract had been terminated under the provisions of Clause 65.

Settlement of Disputes

67.1 **Engineer's Decision**

If a dispute of any kind whatsoever arises between the Employer and the Contractor in connection with, or arising out of, the Contract or the execution of the Works, whether during the execution of the Works or after their completion and whether before or after repudiation or other termination of the Contract, including any dispute as to any opinion, instruction, determination, certificate or valuation of the Engineer, the matter in dispute shall, in the first place, be referred in writing to the Engineer, with a copy to the other party. Such reference shall state that it is made pursuant to this Clause. No later than the eighty-fourth day after the day on which he received such reference the Engineer shall give notice of his decision to the Employer and the Contractor. Such decision shall state that it is made pursuant to this Clause.

Unless the Contract has already been repudiated or terminated, the Contractor shall, in every case, continue to proceed with the Works with all due diligence and the Contractor and the Employer shall give effect forthwith to every such decision of the Engineer unless and until the same shall be revised, as hereinafter provided, in an amicable settlement or an arbitral award.

If either the Employer or the Contractor be dissatisfied with any decision of the Engineer, or if the Engineer fails to give notice of his decision on or before

the eighty-fourth day on which he received the reference, then either the Employer or the Contractor may, on or before the seventieth day after the day on which he received notice of such decision, or on or before the seventieth day after the day on which the said period of 84 days expired, as the case may be, give notice to the other party, with a copy for information to the Engineer, of his intention to commence arbitration, as hereinafter provided, as to the matter in dispute. Such notice shall establish the entitlement of the party giving the same to commence arbitration, as hereinafter provided, as to such dispute and, subject to Sub-Clause 67.4, no arbitration in respect thereof may be commenced unless such notice is given.

If the Engineer has given notice of his decision as to a matter in dispute to the Employer and the Contractor and no notice of intention to commence arbitration as to such dispute has been given by either the Employer or the Contractor on or before the seventieth day after the day on which the parties received notice as to such decision from the Engineer, the said decision shall become final and binding upon the Employer and the Contractor. However, the Blacklisting regime given in section 17-A of PPRA Act, 2009 and rule 21 of PPR-14 read with Schedule appended with the PPR-14 shall have an over-riding effect and shall be applicable in letter and spirit.

67.2 **Amicable Settlement**

Where notice of intention to commence arbitration as to a dispute has been given in accordance with Sub-Clause 67.1, the parties shall attempt to settle such dispute amicably before the commencement of arbitration. Provided that, unless the parties otherwise agree, arbitration may be commenced on or after the fifty-sixth day after the day on which notice of intention to commence arbitration of such dispute was given, even if no attempt at amicable settlement thereof has been made.

67.3 **Arbitration**

Any dispute in respect of which:

(a) the decision, if any, of the Engineer has not become final and binding pursuant to Sub-Clause 67.1, and

(b) amicable settlement has not been reached within the period stated in Sub-Clause 67.2,

shall be finally settled, unless otherwise specified in the Contract, under the Rules of Conciliation and Arbitration of the International Chamber of Commerce by one or more arbitrators appointed under such Rules. The said arbitrator/s shall have full power to open up, review and revise any decision, opinion, instruction, determination, certificate or valuation of the Engineer related to the dispute.

Neither party shall be limited in the proceedings before such arbitrator/s to the evidence or arguments put before the Engineer for the purpose of obtaining his said decision pursuant to Sub-Clause 67.1. No such decision shall disqualify the Engineer from being called as a witness and giving evidence before the arbitrator/s on any matter whatsoever relevant to the dispute.

Arbitration may be commenced prior to or after completion of the Works, provided that the obligations of the Employer, the Engineer and the Contractor shall not be altered by reason of the arbitration being conducted during the progress of the Works.

67.4 **Failure to Comply with Engineer's Decision**

Where neither the Employer nor the Contractor has given notice of intention to commence arbitration of a dispute within the period stated in Sub-Clause 67.1 and the related decision has become final and binding, either party may, if the other party fails to comply with such decision, and without prejudice to any other rights it may have, refer the failure to arbitration in accordance with Sub-Clause 67.3. The provisions of Sub-Clause 67.1 and 67.2 shall not apply to any such reference.

Notices

68.1 **Notice to Contractor**

All certificates, notices or instructions to be given to the Contractor by the Employer or the Engineer under the terms of the Contract shall be sent by post, cable, telex or facsimile transmission to or left at the Contractor's principal place of business or such other address as the Contractor shall nominate for that purpose.

68.2 **Notice to Employer and Engineer**

Any notice to be given to the Employer or to the Engineer under the terms of the Contract shall be sent by post, cable, telex or facsimile transmission to or left at the respective addresses nominated for that purpose in Part II of these Conditions.

68.3 **Change of Address**

Either party may change a nominated address to another address in the country, where the Works are being executed by prior notice to the other party, with a copy to the Engineer, and the Engineer may do so by prior notice to both parties.

Default of Employer

69.1 **Default of Employer**

In the event of the Employer:

(a) failing to pay to the Contractor the amount due under any certificate of the Engineer within 30 days after the expiry of the time stated in Sub-Clause 60.10 within which payment is to be made, subject to any deduction that the Employer is entitled to make

under the Contract, provided work is satisfactory and the Contractor has not indulged in corrupt or fraudulent practices as defined in rule 2 of PPR-14,

(b) interfering with or obstructing or refusing any required approval to the issue of any such certificate, illegally,

(c) becoming bankrupt or, being a company, going into liquidation, other than for the purpose of a scheme of reconstruction or amalgamation, or

(d) giving notice to the Contractor that for economic reasons it is impossible for him to continue to meet his contractual obligations,

the Contractor may resort to the dispute resolution mechanism given in clauses 67.1 to 67.3 above.

69.2 **Removal of Contractor's Equipment**

Upon the expiry of the 14 days' notice referred to in Sub-Clause 69.1, the Contractor shall, notwithstanding the provisions of Sub-Clause 54.1, with all reasonable dispatch, remove from the Site all Contractor's Equipment brought by him thereon.

69.3 **Payment on Termination**

In the event of such termination the Employer shall be under the same obligations to the Contractor in regard to payment as if the Contract had been terminated under the provisions of Clause 65, but, in addition to the payments specified in Sub-Clause 65.8, the Employer shall pay to the Contractor the amount of any loss or damage to the Contractor arising out of or in connection with or by consequence of such termination.

69.4 **Contractor's Entitlement to Suspend Work**

Without prejudice to the Contractor's entitlement to interest under Sub-Clause 60.10, if any, the Contractor may, if the Employer fails to pay the Contractor the amount due under any certificate of the Engineer within 30 days after the expiry of the time stated in Sub-Clause 60.10 within which payment is to be made, subject to any deduction that the Employer is entitled to make under the Contract, after giving 30 days' prior notice to the Employer, with a copy to the Engineer, suspend work or reduce the rate of work; provided the previously done work is satisfactory and the Contractor has not indulged in Corrupt practices as given in rule 2 of PPR-14.

If the Contractor suspends work or reduces the rate of work in accordance with the provisions of this Sub-Clause and thereby suffers delay or incurs costs the Engineer shall, after due consultation with the Employer and the Contractor, determine:

(a) any extension of time to which the Contractor is entitled under Clause 44, and

(b) the amount of such costs, which shall be added to the Contract Price,

and shall notify the Contractor accordingly, with a copy to the Employer.

69.5 **Resumption of Work**

Where the Contractor suspends work or reduces the rate of work, having given notice in accordance with Sub-Clause 69.4, and the Employer subsequently pays the amount due, including interest pursuant to Sub-Clause 60.10, the Contractor’s entitlement under Sub-Clause 69.1 shall, if notice of termination has not been given, lapse and the Contractor shall resume normal working as soon as is reasonably possible.

Changes in Cost and Legislation

70.1 **Increase or Decrease of Cost**

There shall be added to or deducted from the Contract Price such sums in respect of rise or fall in the cost of labour and/or materials or any other matters affecting the cost of the execution of the Works as may be determined in accordance with part II of these Conditions.

70.2 **Subsequent Legislation**

If, after the date for submission of tenders for the Contract there occur in the country- in which the Works are being, or are to be, executed- any changes to National or Provincial Statutes, Ordinance, Decree or other Law or any regulation or bye-law of any local or other duly constituted authority, or the introduction of any such State Statute, Ordinance, Decree, Law, regulation or bye-law which causes additional or reduced cost to the Contractor, other than under Sub-Clause 70.1, in the execution of the Contract, such additional or reduced cost shall, after due consultation with the Employer and the Contractor, be determined by the Engineer and shall be added to or deducted from the Contract Price and the Engineer shall notify the Contractor accordingly, with a copy to the Employer.

Currency and Rates of Exchange

71.1 **Currency Restrictions**

If, after the date for submission of tenders for the Contract, the Government or authorized agency of the Government of the country in which the Works are being or are to be executed imposes currency restrictions and/or transfer of currency restrictions in relation to the currency or currencies in which the Contract Price is to be paid, the Employer shall reimburse any loss or damage to the Contractor arising therefrom, without prejudice to the right of the Contractor to exercise any other rights or remedies to which he is entitled in such event. As a principle, payments in foreign currency are not allowed. In exceptional circumstances, payments may only be allowed if all codal formalities have been fulfilled and approval of the Finance department has been obtained and such provision is given in the SCC.

72.1 **Rates of Exchange**

Where the Contract provides for payment in whole or in part to be made to the Contractor in foreign currency or currencies, such payment shall not be subject to variations in the rate or rates of exchange between such specified foreign currency or currencies and the currency of the country in which the Works are to be executed.

72.2 **Currency Proportions**

Where the Employer has required the Tender to be expressed in a single currency but with payment to be made in more than one currency and the Contractor has stated the proportions or amounts of other currency or currencies in which he requires payment to be made, the rate or rates of exchange applicable for calculating the payment of such proportions or amounts shall, unless otherwise stated in Part II of these Conditions, be those prevailing, as determined by the Central Bank of the country in which the Works are to be executed, on the date for the submission of tenders for the Contract, as has been notified to the Contractor by the Employer prior to the submission of tenders or as provided for in the Tender.

72.3 **Currencies of Payment for Provisional Sums**

Where the Contract provides for payment in more than one currency, the proportions or amounts to be paid in foreign currencies in respect of Provisional Sums shall be determined in accordance with the principles set forth in Sub-Clauses 72.1 and 72.2 as and when these sums are utilized in whole or in part in accordance with the provisions of Clauses 58 and 59.

REFERENCE TO PART II

INDEX

PART I GENERAL CONDITIONS

INDEX	Clause
Access to Site	42.1
Access to Works, Engineer	37.1
Access, Contractor to Satisfy Himself	11.1
Accident or Injury to Workmen - Insurance Against	24.2
Accident or Injury to Workmen - Liability for	24.1
Address, Change of	68.3
Adequacy of Insurance	25.2
Adjustment of Contract Price if Variations Exceed 15 percent of Tender Sum	52.3
Agreement	9.1
Alterations, Additions and Omissions	51&52
Ambiguities in Contract Documents	5.2
Amicable Settlement of Disputes	67.2
Appointment of Assistants to Engineer	2.4
Approval by the Engineer	7.3
Approval of Materials not Implied	54.8
Approval Only by Defects Liability Certificate	61.1
Arbitration	67.3
Assignment of Contract	3.1
Avoidance of Damage to Roads	30.1
Bills of Quantities – Estimated Only	55.1
Boreholes and Exploratory Excavation	18.1
Breakdown of Lump Sum items	57.2
Care of works	20.1
Cash Flow Estimate to be Submitted	14.3
Certificate, Final	60.8
Certificate and Payment, Monthly Statements	60.1
Certificates, Correction of	60.4
Certificate, Taking-Over	48.1
Certification of Completion of Works	48.1
Certification of Completion of Sections or Parts	48.2
Cessation of Employer's Liability	60.9
Change of Address, Notice of	68.3
Claims, Contemporary Records	53.2
Claims, Notice of	53.1
Claims, Payment of	53.5
Claims, Substantiation of	53.3

Claims Under Performance Security 10.3
Clearance of Site on Completion 33.1
Commencement of Works 41.1
Completion of Works, Time for 43.1
Completion of Works, Time for, Extension of 44.1
Completion, Statement at 60.5
Compliance with Insurance Policy Conditions 25.4
Compliance with Statues and Regulations 26.1
Contemporary Records for Claims 53.2
Contract Agreement 9.1
Contract Not Relieved of Duties or Responsibilities 14.4
Contractor's Employees 16.1
Contractor's Employees, Engineer at Liberty to Object 16.2
Contractor's Entitlement to Suspend Work for Employer's Default 69.4
Contractor's Equipment, Conditions of Hire 54.5
Contractor's Equipment, Employer not Liable for Damage 54.2
Contractor's Equipment, Insurance of 21.1
Contractor's Equipment, Reference in Subcontracts 54.7
Contractor's Equipment, Temporary Works and Material; Exclusive Use for the Works 54.1
Contractor's Equipment, Transport of 30.2
Contractor's Failure to Carry Out Instructions 49.4
Contractor's Failure to Insure, Remedy 25.3
Contractor's General Responsibilities 8.1
Contractor's Superintendence 15.1
Contractor to Keep Site Clear 32.1
Contractor to Search 50.1
Correction of Certificates 60.4
Cost of Remedying Defects 49.3
Cost of Samples 36.2
Cost of Tests 35.3
Cost of Tests not Provided for 36.4
Covering up Work, Examination Before 38.1
Cross Liabilities 23.3
Currencies of Payment for Provisional Sums 72.3
Currencies, Rates of Exchange 72.1
Currency Restrictions 71.1
Custody and Supply of Drawings and Documents 6.1
Customs Clearance 54.3
Damage to Persons and Property 22.1
Damage to Roads, Avoidance of 30.1
Damage to Works, Special Risks 65.3

Damages, Liquidated	47.1
Dates for Inspection and Testing	37.3
Daywork	52.4
Decrease or Increase of Costs	70.1
Default of Contractor in Compliance with Instructions on Improper Work	39.2
Default of Contractor, Remedies for	63.1
Default of Employer	69.1
Defective Materials and Work	39.1
Defects, Cost of Remedying	49.3
Defects Liability Certificate	62.1
Defects Liability Period	49.1
Defects, Remedying of	49.2
Definitions	1.1
Delay, Liquidated Damages for	47.1
Delays and Cost of Delay of Drawings	6.4
Design by Nominated Subcontractors	59.3
Discharge	60.7
Discrepancies in Documents	5.2
Dismissal of Contractor's Employees	16.2
Disorderly Conduct, etc.	34.1
Dispute, Engineer's Decision	67.1
Disruption of Progress	6.3
Documents Mutually Explanatory	5.2
Drawings	6&7
Drawings and Documents - Custody and Supply of	6.1
Drawings and Instructions – Supplementary	7.1
Drawing, Copy to be Kept on Site	6.2
Drawings, Delays and Cost of Delay of Drawings	6.4
Drawings, Failure by Contractor to submit	6.5
Employer not liable for Damage to Contractor's Equipment etc.	54.2
Employer's Liability, Cession of	60.9
Employer's Responsibilities	19.2
Employer' Risks	20.4
Engagement of Staff and Labour	34.1
Engineer's Authority to Delegate	2.3
Engineer's Determination Where Tests not Provided for	36.5
Engineer's Duties and Authority	2.1
Engineer to Act Impartially	2.6
Environment – Protection of	19.1
Errors in Setting Out	17.1
Evidence and Terms of Insurance	25.1

Examination of Work before Covering Up	38.1
Exceptions	22.2
Exchange, Rates of	72.1
Exclusions	21.4
Extension of Time, due to Engineer's Failure to give Possession of Site	42.2
Extension of Time for Completion	44.1
Extension of Time for Completion, Contractor's Claims	44.2
Extension of Time for Completion, Engineer's Determination	44.3
Extraordinary Traffic	30.0
Facilities for Other Contractors	31.2
Facilities - Rights of Way and	42.3
Failure by Contractor to Submit Drawings	6.5
Failure to Comply with Claims Procedure	53.4
Failure to Comply with Engineer's Decision	67.4
Failure to give Possession of Site	42.2
Faulty Work, Removal of	39.1
Fees and Notices	
Fencing, Watching, Lighting, etc.	
Final Payment Certificate	26.1
Final Statement	19.1
Foreign Currencies, Payment in	60.8
Fossils	60.6
Foundations, Examination of	72.0
General Responsibilities of Contractor	27.1
Giving of Notices – Payment of Fees	38.1
Headings and Marginal Notes	8.1
Imporper Work and Materials, Removal of	26.1
Increase or Decrease of Costs	1.2
Indemnity by Contractor	39.1
Indemnity by Employer	70.1
Independent Inspection	22.1
Injury to Persons – Damage to Property	24.1
Injury to Workmen	37.2
Inspection and Testing	37.3
Inspection of Testing , Dates for	38.1
Inspection of Foundations, etc.	37.1
Inspection of Operations	11.1
Inspection of Site by Contractor	51.2
Instructions for Variations	2.5
Instructions in Writing	7.1
Instructions, Supplementary	25.2

Insurance, Adequacy of 25.1
Insurance, Evidence and Terms of 23.2
Insurance, Minimum Amount of 21.1
Insurance of Works and Contractor's Equipment 25.3
Insurance,. Remedy on Failure to Insurance 21.3
Insurance, responsibility for Amounts not Recovered 21.2
Insurance, Scope of Cover 23.1
Insurance, Workmen 24.2
Interference with Traffic and Adjoining Properties 29.1
Interim Determination of Extension 44.3
Interpretations 1.3
Labour, Engagements of 34.1
Language/s and Law 5.1
Law to which Contract Subject 70.2
Legislation, Subsequent 19.1
Lighting, Fencing, Watching, etc. 47.1
Liquidated Damages for Delay 47.2
Liquidated Damages, Reduction of 20.3
Loss or Damage due to Employer's Risks 20.2
Loss or Damage – Responsibility to Rectify 57.2
Lump-Sum Items – Breakdown of 30.3
Materials and Plant, Transport of 54.8
Materials, Improper – Removal of 39.1
Materials, Quality of 36.1
Materials, Supply of 8.1
Measurement by Engineer 56.1
Measurement, Method of 57.1
Measurement, Quantities Estimated Only 55.1
Methods of Construction 8.2
Minimum Amount of Insurance 23.2
Monthly Payments 60.2
Nominated Subcontractors, Certification of Payments to 59.5
Nominated Subcontractors, Definition 59.1
Nominated Subcontractors, Design by 59.3
Nominated Subcontractors, Objection to Nomination 59.2
Nominated Subcontractors, Payment of 59.4
Not Foreseeable Physical Obstructions or Conditions 12.2
Notice of Claims 53.1
Notices and Fees, Payment of 26.1
Notices, Consents and Approvals 1.5
Notice to Contractor 68.1

Notice to Employer and Engineer 68.2
Objections to Contractor's Employees 16.2
Obstructions or Conditions - Not Foreseeable Physical 12.2
Omissions, Alterations and Additions 59.0
Openings, Uncovering and Making 38.2
Operations, Inspection of 37.1
Order of Work, Contractor to Furnish Programme 14.1
Other Contractors, Opportunities for 31.1
Patent Rights 28.1
Payment if Contract Terminated for Contractor's Default 63.3
Payment if Contract Terminated for Employer's Default 69.3
Payment of Claims 53.5
Payment, Time for 60.1
Performance Security 10.1
Performance Security – Claims Under 10.3
Performance Security – Period of Validity 10.2
Period of Defects Liability 49.1
Permanent Works Designed by Contractor 7.2
Physical Obstruction or Conditions – Not Foreseeable 12.2
Physical Obstruction or Conditions – Engineer's Determination 12.3
Plant and Materials, Transport of 30.3
Plant, Conditions of Hire 54.5
Plant, Customs Clearance 54.3
Plant, Employer not Liable for Damage to 54.2
Plant, etc. – Exclusive Use for the Works 54.1
Plant, Quality of 36.1
Plant, Re-export of 54.4
Plant, Removal of 39.1
Possession of Site 42.1
Possession of Site, Failure to Give 42.2
Power of Engineer to Fix rates 52.2
Priority of Contract Documents 5.2
Programme to be Submitted 14.1
Progress – Disruption of 6.3
Progress-Rate of 46.1
Protection of Environment 19.1
Provision to Indemnify Contractor 22.3
Provision to Indemnify Employer 22.2
Provisional Sums, Currencies of Payment 72.3
Provisional Sums, Definition 58.1
Provisional Sums, Production of Vouchers 58.3

Provisional Sums, Use of 58.2
Quality of Materials and Workmanship 36.1
Quantities 55.1
Rate of Progress 46.1
Rates of Exchange 72.1
Rates, Power of Engineer to Fix 52.2
Rectification of Loss or Damage 20.2
Reduction of Liquidated Damages 47.2
Re-export of Plant 54.4
Regulations, Status etc. Compliance with 26.1
Rejection 37,4
Release from Performance 66.1
Remedies for Default of Contractor 63.1
Remedying of Defects, 49.2
Remedying of Defects, Cost of 49.3
Remedy on Contractor's Failure 25.3
Removal of Contractor's Employees 16.2
Removal of Contractor's Equipment 69.2
Removal of Plant, etc. 65.7
Responsibility to Rectify Loss or Damage 20.2
Responsibility Un-affected by Approval 7.3
Restriction on Working Hours 45.1
Resumption of Work 69.5
Retention Money, Payment of 50.3
Returns of Labour and Contractor's Equipment 35.1
Revised Programme 14.2
Rights of Way and Facilities 42.3
Risks, Employer's 20.4
Risks, Special 65.0
Roads, etc, - Damage by Extraordinary Traffic 30.1
Roads, Interference with Access to 29.1
Royalties 28.2
Safety, Security and Protection of the Environment 19.1
Samples, Cost of 36.2
Setting-Out 17.1
Singular and Plural 1.4
Site, Clearance on Completion 33.1
Site, Contractor to Keep Clear 32.1
Site Inspection by Contractor 11.1
Site Operations and Methods of Construction 8.2
Site, Possession of 42.1

Special Risks	65.0
Staff, Engagement of	34.1
Statement at Completion	60.5
Statement, Final	60.6
Statutes, Regulations, etc. – Compliance with	26.1
Subcontracting	4.1
Subcontractors, Nominated	59.0
Subcontractors, Responsibility of the Contractor for Acts and Default of	4.1
Subsequent Legislation	70.2
Substantial Completion of Sections or Parts	48.3
Sufficiency of Tender	12.1
Supply of Plant, Materials and Labour	8.1
Surfaces Requiring Reinstatement	48.4
Supervision, Engineer's Determination	40.2
Suspension lasting more than 84 days	40.3
Suspension of Work	40.1
Taking Over Certificate	48.1
Taking Over of Sections or Parts	48.2
Tender Documents	11.1
Tender, Sufficiency of	12.1
Termination of Contract by Employer, Assignment of Benefit	63.4
Terms of Insurance	25.1
Tests, Cost of	36.3
Test not Provide for – Cost of	36.4
Third Part Insurance	23.1
Time for Completion	43.1
Time for Completion, Extension of	44.1
Time for Payment	60.1
Traffic, Extraordinary	30.1
Traffic Interference with	29.1
Traffic Waterborne	30.4
Transport of Contractor's Equipment and Temporary Works	30.2
Transport of Materials and Plant	30.3
Uncovering Work and Making Openings	38.2
Unfulfilled Obligations	62.2
Urgent Remedial Work	64.1
Valuation at Date of Termination by the Employer	63.2
Variations	51.1
Variations, Exceeding 15 percent	52.3
Variations, Instructions for	51.2
Variations, Power of the Engineer to Fix Rates	52.2

Variations, Valuation of	51.3
Vouchers Production of	58.3
War, Outbreak of	20.4
Watching and Lighting, etc.	19.1
Waterborne Traffic	30.4
Work, Examination of Before Covering Up	38.1
Work, Improper, Removal of	39.1
Working Hours, Restriction of	45.1
Workmanship, Quality of	36.1
Workmen, Accident or Injury to	24.1
Works, Care of	20.1
Works, Completion of (Defects Liability Certificate)	62.1
Works Commencement of	41.1
Works Insurance of	21.1
Works Remedying of Defects	49.2
Works, Time for Completion of	43.1
Works to be Measured	56.1
Works, Suspension of	40.1
Work to be in Accordance with the Contract	13.1

TABLE OF CONTENTS

PART II - SPECIAL CONDITIONS OF CONTRACT

Clause	Title	Page
1.1	Definitions	**164**
2.1	Engineer's Duties and Authority	**164**
2.2	Engineer's Representative	**166**
2.7	Engineer Not Liable	**166**
2.8	Replacement of the Engineer	**166**
4.3	Approval of Sub-Contractors	**166**
5.1	Language(s) and Law	**166**
5.2	Priority of Contract Documents	**166**
6.6	Shop Drawings	**167**
6.7	As-Built Drawings	**167**
10.1	Performance Security	**167**
10.4	Performance Security Binding on Variations and Changes	**167**
14.1	Programme to be Submitted	**167**
14.3	Cash Flow Estimate to be Submitted	**168**
14.5	Detailed Programme and Monthly Progress Report	**168**
15.2	Language Ability of Contractor's Representative	**168**
15.3	Contractor's Representative	**169**
16.3	Language Ability of Superintending Staff of Contractor	**169**
16.4	Employment of Local Personnel	**169**
18.1	Boreholes and Exploratory Excavation	**169**
19.3	Safety Precautions	**169**
19.4	Lighting Works at Night	**169**
20.4	Employer's Risks	**169**
21.1	Insurance of Works and Contractor's Equipment	**170**
21.4	Exclusions	**170**
25.5	Insurance Company	**170**
31.3	Co-operation with Other Contractors	**171**
34.2	Rates of Wages and Conditions of Labour	**171**
34.3	Employment of Persons in the Service of Others	**171**
34.4	Housing for Labour	**171**
34.5	Health and Safety	**171**
34.6	Epidemics	**172**
34.7	Supply of Water	**172**
34.8	Alcoholic Liquor or Drugs	**172**
34.9	Arms and Ammunition	**172**

34.10	Festivals and Religious Customs	**172**
34.11	Disorderly Conduct	**172**
34.12	Compliance by Subcontractors	**172**
35.2	Records of Safety and Health	**173**
35.3	Reporting of Accidents	**173**
36.6	Use of Pakistani Materials and Services	**173**
41.1	Commencement of Works	**173**
47.3	Bonus for Early Completion of Works	**173**
48.2	Taking Over of Sections or Parts	**173**
51.2	Instructions for Variations	**173**
52.1	Valuation of Variations	**174**
52.3	Variations Exceeding 15 per cent	**174**
53.4	Failure to Comply	**174**
54.3	Customs Clearance	**174**
54.5	Conditions of Hire of Contractor's Equipment	**174**
59.4	Payments to Nominated Sub-contractors	**174**
59.5	Certification of Payments & Nominated Subcontractors	**174**
60.1	Monthly Statements	**175**
60.2	Monthly Payments	**175**
60.10	Time for Payment	**175**
60.11	Secured Advance on Materials	**175**
60.12	Financial Assistance to Contractor	**176**
63.1	Default of Contractor	**178**
65.2	Special Risks	**178**
67.3	Arbitration	**178**
68.1	Notice to Contractor	**179**
68.2	Notice to Employer and Engineer	**179**
70.1	Increase or Decrease of Cost	**179**
73.1	Payment of Income Tax	**181**
73.2	Customs Duty & Taxes	**181**
74.1	Integrity Pact	**181**
75.1	Termination of Contract for Employer's Convenience	**182**
76.1	Liability of Contractor	**182**
77.1	Joint and Several Liability	**182**
78.1	Details to be Confidential	**182**

PART II - SPECIAL CONDITIONS OF CONTRACT

(Mandatory Provisions not to be Amended / Substituted except as instructed by PEC)

1.1 Definitions

(a) (i) The Employer is: GM Estate Sundar Industrial Estates Gate no 02 Raiwind Road Lahore.

(a) (iv) The Engineer/ Estate Enginear), Sundar Industrial Estates Gate no 02 Raiwind Road Lahore.The Firm/Company/Person nominated as Engineer along with his full address), or any other competent person appointed by the Employer, and notified to the Contractor, to act in replacement of the Engineer. Provided always that except in cases of professional misconduct, the outgoing Engineers is to formulate his certifications/ recommendations in relation to all outstanding matters, disputes and claims relating to the execution of the Works during his tenure.

The following paragraph is added:

(a) (vi) "Bidder or Tenderer" means any person or persons, company, corporation, firm or Joint venture submitting a Bid or Tender.

(b) (v) The following is added at the end of the paragraph:

The word "Tender" is synonymous with "Bid" and the word "Tender Documents" with "Bidding Documents".

The following paragraph is added:

(b) (ix) "Programme" means the programme to be submitted by the Contractor in Accordance
Accordance with Sub-Clause 14.1 and any approved revisions thereto.

(e) (i) The text is deleted and substituted with the following:

"Contract Price" means the sum stated in the Letter of Acceptance as payable to the Contractor for the execution and completion of the Works subject to such additions thereto or deductions there from as may be made and remedying of any defects therein in accordance with the provisions of the Contract.

2.1 Engineer's Duties and Authority

With reference to Sub-Clause 2.1(b), the following provisions shall also apply:

The Engineer shall obtain the specific approval of the Employer before carrying out his duties in accordance with the following Clauses. The Employer may further vary according to need of the project;

(i) Consenting to the sub-letting of any part of the Works under Sub-Clause 4.1 "Subcontracting".
(ii) Certifying additional cost determined under Sub-Clauses 12.2 "Not Foreseeable Physical Obstructions or conditions"
(iii) Any action under Clause 10 "Performance Security" and Clauses 21,23,24 & 25 " Insurance" of sorts.

(iv) Any action under Clause 40 "Suspension"
(v) Any action under Clause 44 "Extension of Time for Completion"
(vi) Any action under Clause 47 "Liquidated Damages for Delay" or payment of Bonus for Early Completion of Works (SCC Sub-Clause 47.3)
(vii) Issuance of "Taking over Certificate" under Clause 48.
(viii) Issuing a Variation Order under Clause 51 except:
a) in an emergency* situation, as stated here below, or
b) if such variation would increase the Contract Price by the amount stated in the Appendix-A to Bid.
(ix) Fixing rates or prices under Clause 52.
(x) Extra payment as a result of Contractor's claims Clause
(xi) Release of Retention Money to the Contractor under Sub-Clause 60.3 "Payment of Retention Money".
(xii) Issuance of "Final Payment Certificate" under Sub-Clause 60.8.
(xiii) Issuance of "Defect Liability Certificate" under Sub-Clause 62.1.
(xiv) Any change in the ratios of Contract currency proportions and payments thereof under clause 72 "Currency and Rate of Exchange".
(Note: Employer may further vary according to need of the project)

* (If in the opinion of the Engineer an emergency occurs affecting the safety of life or of the Works or of adjoining property, the Engineer may, without relieving the Contractor of any of his duties and responsibilities under the Contract, instruct the Contractor to execute all such work or to do all such things as may, in the opinion of the Engineer, be necessary to abate or reduce the risk. The Contractor shall forthwith comply with any such instruction of the Engineer. The Engineer shall determine an addition to the Contract Price, in respect of such instruction, in accordance with Clause 52 and shall notify the Contractor accordingly, with a copy to the Employer.)

2.2 Engineer's Representative

Add the following paragraph:

The Employer shall ensure that the Engineer's Representative is a professional engineer as defined in the Pakistan Engineering Council Act 1975 (V of 1976).

The following Sub-Clauses 2.7 and 2.8 are added:

2.7 Engineer Not Liable

Approval, reviews and inspection by the Engineer of any part of the Works does not relieve the Contractor from his sole responsibility and liability for the supply of materials, plant and equipment for construction of the Works and their parts in accordance with the Contract and neither the Engineer's authority to act nor any decision made by him in good faith as provided for under the Contract whether to exercise or not to exercise such authority shall give rise to any duty or responsibility of the Engineer to the Contractor, any Subcontractor, any of their representatives or employees or any other person performing any portion of the Works. However, the Engineer shall also be held responsible for his unlawful, non-factual and unreasonable decisions.

2.8 Replacement of the Engineer

"If the Employer intends to replace the Engineer, the Employer shall, not less than 14 days before the intended date of replacement, give notice to the Contractor, of the name, address and relevant experience of the intended replacement Engineer. The Employer shall not replace the Engineer with a person against whom the Contractor raises reasonable objection by notice to the Employer, with supporting particulars."

5.1 Language(s) and Law

(a) The Contract Documents shall be drawn up in the English language.

(b) The Contract shall be subjected to the Laws of Islamic Republic of Pakistan

5.2 Priority of Contract Documents

The documents listed at (1) to (6) of the Sub-Clause are deleted and substituted with the following:

(1) The Contract Agreement (if completed);

(2) The Letter of Acceptance;

(3) The completed Form of Bid;

(4) Special Stipulations (Appendix-A to Bid);

(5) The Special Conditions of Contract – Part II;

(6) The General Conditions – Part I;

(7) The priced Bill of Quantities (Appendix-D to Bid);

(8) The completed Appendices to Bid (B, C, E to L);

(9) The Drawings;

(10) The Specifications; and

(11) (any other).

In case of discrepancies between drawings, those of larger scale shall govern unless they are superseded by a drawing of later date regardless of scale. All Drawings and Specifications shall be interpreted in conformity with the Contract and these Conditions. Addendum, if any, shall be deemed to have been incorporated at the appropriate places in the documents forming the Contract.

The following Sub-Clauses 6.6 and 6.7 are added

6.6 Shop Drawings

The Contractor shall submit to the Engineer for review 3 copies of all shop and erection drawings applicable to this Contract as per provision of relevant Sub-Clause of the Contract. A copy shall be submitted to the Employer as well.

Review and approval by the Engineer shall not be construed as a complete check but will indicate only that the general method of construction and detailing is satisfactory and that the Engineer's review or approval shall not relieve the Contractor of any of his responsibilities under the Contract.

6.7 As-Built Drawings

At the completion of the Works under the Contract, the Contractor shall furnish to the Engineer 6 copies and one reproducible of all drawings amended to conform with the Works as built. A set shall be provided to the Employer as well. The price of such Drawings shall be deemed to be included in the Contract Price.

10.1 Performance Security

The text is deleted and substituted with the following:

The Contractor shall provide Performance Security to the Employer in the prescribed form. The said Security shall be furnished or caused to be furnished by the Contractor within 30 days after the receipt of the Letter of Acceptance. The Performance Security shall be of an amount equal to 10% of the Contract Price stated in the Letter of Acceptance. Such Security shall, at the option of the bidder, be in the form of either (a) bank guarantee from any Scheduled Bank in Pakistan or (b) bank guarantee from a bank located outside Pakistan duly counter-guaranteed by a Scheduled Bank in Pakistan.

The cost of complying with requirements of this Sub-Clause shall be borne by the Contractor.

The following Sub-Clause10.4 is added:

10.4 Performance Security Binding on Variations and Changes

The Performance Security shall be binding irrespective of changes in the quantities or variations in the Works or extensions in Time for Completion of the Works which are granted or agreed upon under the provisions of the Contract.

14.1 Programme to be Submitted

The programme shall be submitted within 42 days from the date of receipt of Letter of Acceptance, which shall be in the form of:

i) a Bar Chart identifying the critical activities.

ii) a CPM identifying the critical path/activities.

(Employer to select appropriate one)

14.3 Cash Flow Estimate to be Submitted

The detailed Cash Flow Estimate shall be submitted within 21 days from the date of receipt of Letter of Acceptance

The following Sub-Clause 14.5 is added:

14.5 Detailed Programme and Monthly Progress Report

a) For purposes of Sub-Clause 14.1, the Contractor shall submit to the Engineer, the Employer and the Administrative Department, the detailed programme for the following:

(1) Execution of Works;

(2) Labour Employment;

(3) Local Material Procurement;

(4) Material Imports, if any; and

(5) Other details as required by the Engineer.

(b) During the period of the Contract, the Contractor shall submit to the Engineer, the Employer and the Administrative Department, not later than the 8th day of the following month, 10 copies each of Monthly Progress Reports covering with a copy to the employer:

(1) A Construction Schedule indicating the monthly progress in percentage;

(2) Description of all work carried out since the last report;

(3) Description of the work planned for the next 56 days sufficiently detailed to enable the Engineer to determine his programme of inspection and testing;

(4) Monthly summary of daily job record;

(5) Photographs to illustrate progress; and

(6) Information about problems and difficulties encountered, if any, and proposals to overcome the same.

(c) During the period of the Contract, the Contractor shall keep a daily record of the work progress, which shall be made available to the Engineer, the Employer and the Administrative Department, as and when requested. The daily record shall include particulars of weather conditions, number of men working, deliveries of materials, quantity, location and assignment of Contractor's equipment.

The following Sub-Clauses 15.2 and 15.3 are added:

15.2 Language Ability of Contractor's Representative

The Contractor's authorised representative shall be fluent in the English language. Alternately an interpreter with ability of English language shall be provided by the Contractor on full time

basis.

15.3 Contractor's Representative

The Contractor's authorised representative and his other professional engineers working at Site shall register themselves with the Pakistan Engineering Council.

The Contractor's authorised representative at Site shall be authorised to exercise adequate administrative and financial powers on behalf of the Contractor so as to achieve completion of the Works as per the Contract.

The following Sub-Clauses 16.3 and 16.4 are added:

16.3 Language Ability of Superintending Staff of Contractor

A reasonable proportion of the Contractor's superintending staff shall have a working knowledge of the English language. If the Contractor's superintending staff are not fluent in English language, the Contractor shall make competent interpreters available during all working hours in a number deemed sufficient by the Engineer.

16.4 Employment of Local Personnel

The Contractor is encouraged, to the extent practicable and reasonable, to employ staff and labour from sources within Pakistan.

The following Sub-Clauses 19.3 and 19.4 are added:

19.3 Safety Precautions

In order to provide for the safety, health and welfare of' persons, and for prevention of damage of any kind, all operations for the purposes of or in connection with the Contract shall be carried out in compliance with the Safety Requirements of the Government of Pakistan with such modifications thereto as the Engineer may authorise or direct and the Contractor shall take or cause to be taken such further measures and comply with such further requirements as the Engineer may determine to be reasonably necessary for such purpose.

The Contractor shall make, maintain and submit reports to the Engineer concerning safety, health and welfare of persons and damage to property, as the Engineer may from time to time prescribe.

19.4 Lighting Work at Night

In the event of work being carried out at night, the Contractor shall at his own cost, provide and maintain such good and sufficient light as will enable the work to proceed satisfactorily and without danger. The approaches to the Site and the Works where the night-work is being carried out shall be sufficiently lighted. All arrangement adopted for such lighting shall be to the satisfaction of the Engineer's Representative.

20.4 Employer's Risks

The Employer's risks are:

Delete the text and substitute with the following:

(a) insofar as they directly affect the execution of the Works in Pakistan:

(i) war and hostilities (whether war be declared or not), invasion, act of foreign enemies,

(ii) rebellion, revolution, insurrection, or military or usurped power, or civil war,

(iii) ionizing radiations, or contamination by radioactivity from any nuclear fuel, or from any nuclear waste from the combustion of nuclear fuel, radioactive toxic explosive or other hazardous properties of any explosive nuclear assembly or nuclear component thereof,

(iv) pressure waves caused by aircraft or other aerial devices travelling at sonic or supersonic speeds,

(v) riot, commotion or disorder, unless solely restricted to the employees of the Contractor or of his Subcontractors and arising from the conduct of the Works;

(b) loss or damage due to the use or occupation by the Employer of any Section or part of the Permanent Works, except as may be provided for in the Contract;

(c) loss or damage to the extent that it is due to the design of the Works, other than any part of the design provided by the Contractor or for which the Contractor is responsible; [For all those projects where funding is available, the Design Consultants shall be made responsible for any design faults. It shall be ensured that the Design Consultants remain available for Top Supervision and rectification of any subsequent faults/ issues till the successful completion of the project/ closing of the contract including defect liability period if any];

(d) any operation of the forces of nature (insofar as it occurs on the Site) which an experienced contractor:

(i) could not have reasonably foreseen, or

(ii) could reasonably have foreseen, but against which he could not reasonably have taken at least one of the following measures:

(a) prevent loss or damage to physical property from occurring by taking appropriate measures, or

(b) insure against.

21.1 Insurance of Works and Contractor's Equipment

(Employer may vary this Sub-Clause 21.1 (b))

21.4 Exclusions

The text is deleted and substituted with the following:

There shall be no obligation for the insurances in Sub-Clause 21.1 to include loss or damage caused by the risks listed under Sub-Clause 20.4 paras (a) (i) to (iv).

The following Sub-Clause 25.5 is added:

25.5 Insurance Company

The Contractor shall be obliged to place all insurances relating to the Contract (including, but not limited to, the insurances referred to in Clauses 21, 23 and 24) with either Government's State Life Insurance Company or National Insurance Company of Pakistan or any other insurance company operating in Pakistan and acceptable to the Employer.

Costs of such insurances shall be borne by the Contractor.

The following Sub-Clause 31.3 is added:

31.3 Co-operation with other Contractors

During the execution of the Works, the Contractor shall co-operate fully with other contractors working for the Employer at and in the vicinity of the Site and also shall provide adequate precautionary facilities not to make himself a nuisance to local residents and other contractors.

The following Sub-Clauses 34.2 to 34.12 are added:

34.2 Rates of Wages and Conditions of Labour

The Contractor shall pay rates of' wages and observe conditions of labour not less favourable than those established for the trade or industry where the work is carried out. In the absence of any rates of wages or conditions of labour so established, the Contractor shall pay rates of wages and observe conditions of labour which are not less favourable than the general level of wages and conditions observed by other employers whose general circumstances in the trade or in industry in which the Contractor is engaged are similar.

34.3 Employment of Persons in the Service of Others

The Contractor shall not recruit his staff and labour from amongst the persons in the services of the Employer or the Engineer; except with the prior written consent of the Employer or the Engineer, as the case may be.

34.4 Housing for Labour

Save insofar as the Contract otherwise provides, the Contractor shall provide and maintain such housing accommodation and amenities as he may consider necessary for all his supervisory staff and labour, employed for the purposes of or in connection with the Contract including all fencing, electricity supply, sanitation, cookhouses, fire prevention, water supply and other requirements in connection with such housing accommodation or amenities. On completion of the Contract, these facilities shall be handed over to the Employer or if the Employer so desires, the temporary camps or housing provided by the Contractor shall be removed and the Site reinstated to its original condition, all to the approval of the Engineer.

34.5 Health and Safety

Due precautions shall be taken by the Contractor, and at his own cost, to ensure the safety of his staff and labour at all times throughout the period of the Contract. The Contractor shall further ensure that suitable arrangements are made for the prevention of epidemics and for all necessary welfare and hygiene requirements.

34.6 Epidemics

In the event of any outbreak of illness of an epidemic nature, the Contractor shall comply with and carry out such regulations, orders and requirements as may be made by the Government, or the local medical or sanitary authorities, for purpose of dealing with and overcoming the same.

34.7 Supply of Water

The Contractor shall, so far as is reasonably practicable, having regard to local conditions**,** provide on the Site, to the satisfaction of the Engineer or his representative, adequate supply of drinking and other water for the use of his staff and labour.

34.8 Alcoholic Liquor or Drugs

The Contractor shall not, otherwise than in accordance with the Statutes, Ordinances and Government Regulations or Orders for the time being in force, import, sell, give, barter or otherwise dispose of any alcoholic liquor or drugs, or permit or suffer any such importation, sale, gift, barter or disposal by his Subcontractors, agents, staff or labour.

34.9 Arms and Ammunition

The Contractor shall not give, or otherwise dispose of to any person or persons, any arms or ammunition of any kind or permit or suffer the same as aforesaid.

34.10 Festivals and Religious Customs

The Contractor shall in all dealings with his staff and labour have due regard to all recognised festivals, days of rest and religious and other customs.

34.11 Disorderly Conduct

The Contractor shall at all times take all reasonable precautions to prevent any unlawful, riotous or disorderly conduct by or amongst staff and labour and for the preservation of peace and protection of persons and property in the neighborhood of the Works against the same.

34.12 Compliance by Subcontractors

The Contractor shall be responsible for compliance by his Subcontractors of the provisions of this Clause.

The following Sub-Clauses 35.2 and 35.3 are added:

35.2 Records of Safety and Health

The Contractor shall maintain such records and make such reports concerning safety, health and welfare of persons and damage to property as the Engineer may from time to time prescribe.

35.3 Reporting of Accidents

The Contractor shall report to the Engineer details of any accident as soon as possible after its occurrence. In the case of any fatality or serious accident, the Contractor shall, in addition, notify the Engineer immediately by the quickest available means.

The following Sub-Clause 36.6 is added:

36.6 Use of Pakistani Materials and Services

The Contractor shall , so far as may be consistent with the Contract, make the maximum use of materials, supplies, plant and equipment indigenous to or produced or fabricated in Pakistan and services, available in Pakistan provided such materials, supplies, plant, equipment and services shall be of required standard.

41.1 Commencement of Works

The text is deleted and substituted with the following:

The Contractor shall commence the Works on Site within the period named in Appendix-A to Bid from the date of receipt by him from the Engineer of a written Notice to Commence. Thereafter, the Contractor shall proceed with the Works with due expedition and without delay.

The following Sub-Clause 47.3 is added:

47.3 Bonus for Early Completion of Works

The Contractor may, in case of earlier completion for either whole or part(s) of the Works pursuant to Sub-Clauses 48.1 and 48.2(a) respectively of the General Conditions of Contract, be paid bonus up-to a limit and at a rate equivalent to 50% of the relevant limit and rate of liquidated damages prescribed in Appendix-A to Bid “Special Stipulations”; provided such provision is given in project approval documents.

48.2 Taking Over of Sections or Parts

For the purposes of para (a) of this Sub-Clause, separate Times for Completion shall be provided in the Appendix-A to Bid “Special Stipulations”.

51.2 Instructions for Variations

At the end of the first sentence, after the word “Engineer", the words “in writing” are added.

52.1 Valuation of Variations

In the tenth line, after the words “Engineer shall” the following is added:

Within a period not exceeding one-eighth of the completion time subject to a minimum of 56 days from the date of disagreement whichever is later.

53.4 Failure to Comply

This Sub-Clause is deleted in its entirety.

54.3 Customs Clearance

(Employer may vary this Sub-Clause)

54.5 Conditions of Hire of Contractor’s Equipment

The following paragraph is added:

The Contractor shall, upon request by the Engineer at any time in relation to any item of hired Contractor’s Equipment, forthwith notify the Engineer in writing the name and address of the Owner of the equipment and shall certify that the agreement for the hire thereof contains a provision in accordance with the requirements set forth above.

The following Sub-Clauses 59.4 & 59.5 are added:

59.4 Payments to Nominated Subcontractors

The Contractor shall pay to the nominated Subcontractor the amounts which the Engineer certifies to be due in accordance with the subcontract. These amounts plus other charges shall be included in the Contract Price in accordance with Clause 58 [Provisional Sums], except as stated in Sub-Clause 59.5 [Certification of Payments].

59.5 Certification of Payments & Nominated Subcontractors

Before issuing a Payment Certificate which includes an amount payable to a nominated Subcontractor, the Engineer may request the Contractor to supply reasonable evidence that the nominated Subcontractor has received all amounts due in accordance with previous Payment Certificates, less applicable deductions for retention or otherwise. Unless the Contractor:

a) submits reasonable evidence to the Engineer, or

b) i) satisfies the Engineer in writing that the Contractor is reasonably entitled to withhold or refuse to pay these amounts, and

ii) submits to the Engineer reasonable evidence that the nominated Subcontractor has been notified of the Contractor's entitlement,

then the Employer may (at his sole discretion) pay direct to the nominated Subcontractor, part or all of such amounts previously certified (less applicable deductions) as are due to the nominated Subcontractor and for which the Contractor has failed to submit the evidence described in sub-paragraphs (a) or (b) above. The Contractor shall then repay, to the Employer, the amount which the nominated Subcontractor was directly paid by the Employer.

60.1 Monthly Statements

In the first line after the word "shall", the following is added:

"on the basis of the joint measurement of work done under Clause 56.1,"

In Para (c) the words "the Appendix to Tender" are deleted and substituted with the words "Sub-Cause 60.11 (a)(6) hereof".

(in case Clause 60.11 is applicable)

60.2 Monthly Payments

In the first line, "28" is substituted by "14".

60.10 Time for Payment

The text is deleted and substituted with the following:

The amount due to the Contractor under any Interim Payment Certificate issued by the Engineer pursuant to this Clause, or to any other terms of the Contract, shall , subject to Clause 47, be paid by the Employer to the Contractor within 30 days after such Interim Payment Certificate or the Final Certificate as has been jointly verified by Employer and Contractor, provided that the work is satisfactory and the Contractor has not indulged in Corrupt Practices as defined in Section 2 of the PPRA Act 2009; and provided further that the provisions of the donor documents shall prevail in case of foreign funded projects. In the event of the failure of the Employer to make payment within the times stated, the provisions w.r.t. dispute resolution may be invoked.

The following Sub-Clause 60.11is added:

60.11 Secured Advance on Materials

a) The Contractor shall be entitled to receive from the Employer Secured Advance against an indemnity bond acceptable to the Employer of such sum as the Engineer may consider proper in respect of non-perishable materials brought at the Site but not yet incorporated in the Permanent Works provided that:

(1) The materials are in accordance with the Specifications for the Permanent Works;

(2) Such materials have been delivered to the Site and are properly stored and protected against loss or damage or deterioration to the satisfaction of the Engineer but at the risk and cost of the Contractor;

(3) The Contractor's records of the requirements, orders, receipts and use of materials are kept in a form approved by the Engineer, and such records shall be available for inspection by the Engineer;

(4) The Contractor shall submit with his monthly statement the estimated value of the materials on Site together with such documents as may be required by the Engineer for the purpose of valuation of materials and providing evidence of ownership and payment therefor;

(5) Ownership of such materials shall be deemed to vest in the Employer and these materials shall not be removed from the Site or otherwise disposed of without written permission of the Employer; and

(6) The sum payable for such materials on Site shall not exceed 75 % of the (i) landed cost of imported materials, or (ii) ex-factory / ex-warehouse price of locally manufactured or produced materials, or (iii) market price of other materials.

(b) The recovery of Secured Advance paid to the Contractor under the above provisions shall be effected from the monthly payments on actual consumption basis.

60.12 Financial Assistance to Contractor

Financial assistance shall be made available to the Contractor by the Employer by adopting any one of the following three Alternatives, upon submission by the Contractor of a Mobilization Advance Guarantee for the full amount of the Advance in the specified form from a Scheduled Bank in Pakistan**:**

(Appropriate alternative only to be retained)

Alternative One: Mobilization Advance

(a) An interest-free Mobilization Advance up to 15 % of the Contract Price stated in the Letter of Acceptance in two parts: a) First part, 10% before the commencement of works; and, b) Second part, 5% within 42 days from the date of payment of the first part, subject to the deployment of adequate staff/ equipment, plants, establishment of Contractor' colony and submission of Insurance Policies to the satisfaction of the Engineer.

(b) This Advance shall be recovered in equal instalments; first instalment at the expiry of third month after the date of payment of first part of Advance and the last instalment two months before the date of completion of the Works as per Clause 43 hereof.

Alternative Two: Mobilization/ Demobilization Cost

Mobilization Cost shall be paid to the Contractor as a part of the priced Bill of Quantities. This cost shall not exceed 10 % of the Tender Price and shall be paid to the Contractor as follows:

(i) 80 % of the Mobilization Cost shall be paid for mobilization at Site. This payment shall be in three stages as follows:

Stage I: 20 % of Mobilization Cost upon obtaining and furnishing of Performance Security and insurance policies and construction of camp and housing facilities as required under the Contract;

Stage II: 30 % of Mobilization Cost upon providing & installing preliminary requirements of Contractor's Equipment, materials and temporary structures for the commencement of Works to the satisfaction of the Engineer and achieving 3 % value of the Works (excluding payment under Stage-I);

Stage III: 30 % of Mobilization Cost upon providing balance Contractor's Equipment to complete full requirement for the entire work and after achievement of progress to the extent of 6 % value of the Works (excluding payments under Stages I and II); and

(ii) 20 % of Mobilization Cost shall be paid for operation and maintenance of the constructed facilities and for demobilization as per schedule of payment to be submitted by the Contractor in accordance with Clause 57.2 and approved by the Engineer.

Alternative Three: Materials Supplied by Employer

The Employer shall supply to the Contractor materials, like cement, steel, bitumen or any other material whichever deemed necessary to complete the project; and the cost thereof shall be recovered from the Contractor through monthly statements on the basis of actual consumption.

The list of materials, quantities and rates to be charged to the Contractor shall be provided alongwith Appendix-A to Bid "Special Stipulations".

(Employer may opt either "Secured Advance on Materials" or "Financial Assistance to Contractor")

63.1 Default of Contractor

The following para is added at the end of the Sub-Clause:

Provided further that in addition to the action taken by the Employer against the Contractor under this Clause, the Employer may also refer the case of default of the Contractor to Pakistan Engineering Council for punitive action under the Construction and Operation of Engineering Works Bye-Laws 1987, as amended from time to time.

65.2 Special Risks

The text is deleted and substituted with the following:

The Special Risks are the risks defined under Sub-Clause 20.4 sub paragraphs (a) (i) to (a) (v).

67. 3 Arbitration

In the sixth to eight lines, the words "shall be finally settled ..... appointed under such Rules" are deleted and substituted with the following:

shall be finally settled under the provisions of the Arbitration Act, 1940 as amended or any statutory modification or re-enactment thereof for the time being in force.

The following paragraph is added:

The place of arbitration shall be ……, Pakistan.

68.1 Notice to Contractor

The following paragraph is added:

For the purposes of this Sub-Clause, the Contractor shall, immediately after receipt of Letter of Acceptance, intimate in writing to the Employer and the Engineer by registered post, the

address of his principal place of business or any change in such address during the period of the Contract.

68.2 Notice to Employer and Engineer

For the purposes of this Sub-Clause, the respective address are:

a) The Employer :

…….....
(to be filled in by the Employer as appropriate)

b) The Engineer:

…….....
(to be filled in by the Employer as appropriate)

70.1 Increase or Decrease of Cost

Sub-Clause 70.1 is deleted in its entirety, and substituted with the following:

The amounts payable to the Contractor, pursuant to Sub-Clause 60.1, shall be adjusted in respect of the rise or fall in the cost of labor, materials, and other inputs to the Works, by applying to such amount the formula prescribed in this Sub-Clause.

(a) Other Changes in Cost

To the extent that full compensation for any rise or fall in costs to the Contractor is not covered by the provisions of this or other Clauses in the Contract, the unit rates and prices included in the Contract shall be deemed to include amounts to cover the contingency of such other rise or fall of costs.

(b) Adjustment Formula

The adjustment to the monthly statements in respect of changes in cost shall be determined from the following formula:-

$$Pn = A + b\frac{Ln}{Lo} + c\frac{Mn}{Mo} + d\frac{En}{Eo} + \ldots\ldots\ldots\ldots\ldots\ldots$$

Where:

Pn is a price adjustment factor to be applied to the amount for the payment of the work carried out in the subject month, determined in accordance with Paragraph 60.1 (a), and with Paragraphs 60.1 (b) and (e), where any variations and daywork are not otherwise subject to adjustment;

A is a constant, specified in Appendix-C to Bid, representing the nonadjustable portion in contractual payments;

b, c, d, etc., are weightages or coefficients representing the estimated proportion of each cost element (labour, cement and reinforcing steel etc.) in the Works or Sections thereof, net of Provisional Sums and Prime Cost; the sum of A, b, c, d, etc., shall be one;

Ln, Mn, En, etc., are the current cost indices or reference prices of the cost elements for month "n", determined pursuant to Sub-Clause 70.1(d), applicable to each cost element; and

Lo, Mo, Eo, etc., are the base cost indices or reference prices corresponding to the above cost elements at the date specified in Sub-Clause 70.1(d).

(c) Sources of Indices and Weightages

The sources of indices shall be those listed in Appendix-C to Bid, as approved by the Engineer. As the proposed basis for price adjustment, the Contractor shall have submitted with his bid the tabulation of Weightages and Source of Indices if different than those given in Appendix-C to Bid, which shall be subject to approval by the Engineer.

(d) Base, Current, and Provisional Indices

The base cost indices or prices shall be those prevailing on the day 30 days prior to the latest date for submission of bids. Current indices or prices shall be those prevailing on the day 30 days prior to the last day of the period to which a particular monthly statement is related. If at any time the current indices are not available, Provisional indices as determined by the Engineer will be used, subject to subsequent correction of the amounts paid to the Contractor when the current indices become available.

(e) Adjustment after Completion

If the Contractor fails to complete the Works within the Time for Completion prescribed under Clause 43, adjustment of prices thereafter until the date of completion of the Works shall be made using either the indices or prices relating to the prescribed time for completion, or the current indices or prices, whichever is more favorable to the Employer, provided that if an extension of time is granted pursuant to Clause 44, the above provision shall apply only to adjustments made after the expiry of such extension of time.

(f) Weightages

The weightages for each of the factors of cost given in Appendix-C to Bid shall be adjusted if, in the opinion of the Engineer, they have been rendered unreasonable, unbalanced, or inapplicable as a result of varied or additional work executed or instructed under Clause 51. Such adjustment(s) shall have to be agreed in the variation order.

The following Sub-Clauses 73.1, 73.2, 74.1, 75.1, 76.1, 77.1and 78.1 are added:

73.1 Payment of all taxes/ rates/ fees: Income Tax, Sales tax etc.

The Contractor, Subcontractors and their employees shall be responsible for payment of all applicable (federal & provincial) taxes/ rates/ fees: income tax, sales tax and other taxes/ rates/ fees etc. arising out of the Contract and the rates and prices stated in the Contract shall be deemed to cover all such expenses till the closing of contract, including the defect liability period if any.

73.2 Customs Duty & Taxes

(Employer may incorporate provisions where applicable)

74.1 Integrity Pact

If the Contractor or any of his Subcontractors, agents or servants is found to have violated or involved in violation of the Integrity Pact signed by the Contractor as Appendix-L to his Bid, then the Employer shall be entitled to:

(a) recover from the Contractor an amount equivalent to ten times the sum of any commission, gratification, bribe, finder's fee or kickback given by the Contractor or any of his Subcontractors, agents or servants;

(b) terminate the Contract; and

(c) recover from the Contractor any loss or damage to the Employer as a result of such termination or of any other corrupt business practices of the Contractor or any of his Subcontractors, agents or servants.

The termination under Sub-Para (b) of this Sub-Clause shall proceed in the manner prescribed under Sub-Clauses 63.1 to 63.4 and the payment under Sub-Clause 63.3 shall be made after having deducted the amounts due to the Employer under Sub-Para (a) and (c) of this Sub-Clause.

75.1 Termination of Contract for Employer's Convenience

The Employer shall be entitled to terminate the Contract at any time for the Employer's convenience after giving 56 days prior notice to the Contractor, with a copy to the Engineer. In the event of such termination, the Contractor :

(a) shall proceed as provided in Sub-Clause 65.7 hereof; and

(b) shall be paid by the Employer as provided in Sub-Clause 65.8 hereof.

76.1 Liability of Contractor

The Contractor or his Subcontractors or assigns shall follow strictly, all relevant labour laws including the Workmen's Compensation Act and the Employer shall be fully indemnified for all claims, damages etc. arising out of any dispute between the Contractor, his Subcontractors or assigns and the labour employed by them.

77.1 Joint and Several Liability

If the Contractor is a joint venture of two or more persons, all such persons shall be jointly and severally bound to the Employer for the fulfilment of the terms of the Contract and shall designate one of such persons to act as leader with authority to bind the joint venture. The composition or the constitution of the joint venture shall not be altered without the prior consent of the Employer.

78.1 Details to be Confidential

The Contractor shall treat the details of the Contract as private and confidential, save in so far as may be necessary for the purposes thereof, and shall not publish or disclose the same or any particulars thereof in any trade or technical paper or elsewhere without the prior consent in writing of the Employer or the Engineer. If any dispute arises as to the necessity of any publication or disclosure for the purpose of the Contract, the same shall be referred to the decision of the Engineer whose award shall be final.

PART II –SPECIAL CONDITIONS OF CONTRACT

Index	**Clause**	**0**
Alcoholic Liquor or Drugs	34.8	
Arbitration	67.3	
Arms and Ammunition	34.9	
As-Built Drawings	6.7	
Bonus for Early Completion of Works	47.3	
Cash Flow Estimate to be Submitted	14.3	
Commencement of Works	41.1	
Compliance by Sub-Contractors	34.12	
Conditions of Hire of Contractor's Equipment	54.5	
Contractor's Representative	15.3	
Co-operation with Other Contractors	31.3	
Customs Clearance	54.3	
Customs Duty and Taxes	73.2	
Default of Contractor	63.1	
Definitions	1.1	
Detailed Programme and Monthly Progress Report	14.5	
Details to be Confidential	78.1	
Disorderly Conduct	34.11	
Employer's Risks	20.4	
Employment of Local Personnel	16.4	
Employment of Persons in the Service of Others	34.3	
Engineer Not Liable	2.7	
Engineer's Duties and Authority	2.1	
Engineer's Representative	2.2	
Epidemics	34.6	
Exclusions	21.4	
Failure to Comply	53.4	
Festivals and Religious Customs	34.10	
Financial Assistance to Contractor	60.11	
Health and Safety	34.5	
Housing for Labour	34.4	
Increase or Decrease of Cost	70.1	
Instructions for Variations	51.2	
Insurance of Works and Contractor's Equipment	21.1	
Insurance Company	25.5	
Integrity Pact	74.1	
Joint and Several Liability	77.1	

Index	Clause	0
Language Ability of Contractor's Representative	15.2	
Language Ability of Superintending Staff of Contractor	16.3	
Language(s) and Law	5.1	
Liability of Contractor	76.1	
Lighting Work at Night	19.4	
Monthly Payments	60.2	
Monthly Statements	60.1	
Notice to Contractor	68.1	
Notice to Employer and Engineer	68.2	
Payment of Income Tax	73.1	
Payments of Nominated Subcontractors	59.4	
Performance Security	10.1	
Performance Security Binding on Variation and Changes	10.4	
Priority of Contract Documents	5.2	
Programme to be Submitted	14.1	
Rates of Wages and Conditions of Labour	34.2	
Records of Safety and Health	35.2	
Replacement of the Engineer	2.8	
Reporting of Accidents	35.3	
Safety Precautions	19.3	
Secured Advance on Materials	60.11	
Shop Drawings	6.6	
Special Risks	65.2	
Supply of Water	34.7	
Taking Over of Sections or Parts	48.2	
Termination of Contract for Employer's Convenience	75.1	
Time for Payment	60.10	
Use of Pakistani Materials and Services	36.6	
Valuation of Variations	52.1	

PUNJAB INDUSTRIAL ESTATES DEVELOPMENT AND MANAGEMENT COMPANY (PIEDMC)

Bidding Documents

For

"REHABLITATION OF AQUAFER WELLS AT SUNDAR INDUSTRIAL ESTATE"

ITB # PIE/P&C/AW/BOM-SIE/26/12

BILL OF QUANTITIES (BOQ)

VOLUME-II

October, 2026

PUNJAB INDUSTRIAL ESTATES DEVELOPMENT AND MANAGEMENT COMPANY (PIEDMC)

REHABLITATION OF AQUAFER WELLS AT SUNDAR INDUSTRIAL ESTATE

Summary of Bid Schedule

A. Schedule Items: -

1	Aquafer Well Type 01 (02 Nos)	Rs. 686, 672./-
2	Aquafer Well Type 02 (26 Nos)	Rs. 15,411,338/-
	Sub Total (A)	**Rs. 16,098,010/-**

B. Non-Schedule Items: -

1.	Aquafer Well Type 01 (02 Nos)	Rs.
2.	Aquafer Well Type 02 (26 Nos)	Rs.
	Sub Total (B)	**Rs.**

C. Schedule items Rs. 16,098,010 x _____ Above / Below Rs.

D.	**Total (A+ B+ C)**	**Rs.**
E.	**Add 16% PRA on (D)**	**Rs.**
F.	**Grand Total (D + E)**	**Rs.**

Amounts in Words: _____

_____

Signature & Stamp of PIEDMC_____ Signature & Stamp of Contractor_____

PUNJAB INDUSTRIAL ESTATES DEVELOPMENT AND MANAGEMENT COMPANY (PIEDMC)

REHABLITATION OF AQUAFER WELLS AT SUNDAR INDUSTRIAL ESTATE

Bill of Quantities (BOQ)

1. Aquafer Wells Type 01 (02 Nos)

Ser	Ref.	Description of Work		QTY	Unit	Rate	Amount
Schedule Items							
1		Excavation in foundation of building, bridges and other structures, including dagbelling, dressing, refilling in layers around structure with 17.1 to 17.5 excavated earth, watering and ramming lead 'upto one chain (30 m) and lift upto 5 ft. (1.5 m).					
	3/21/1/a/ii	Depth upto 5ft (1.5m) By Manual ii) in ordinary soil.		1,859.00	Cft	17.09	31,766.96
	3/21/2/a/ii	Depth from 5.1 ft (1.5m) to 15 ft (4.5 m):		4,038.00	Cft	13.53	54,626.87
2	23/2aii	Direct Rotary/ Reverse Rotary drilling of bore for tubewells, in all types of soil except shingle, gravel and rock:- a) from ground level to 250 ft. (75 m) below ground level:- ii) 24" i/d		300.00	Rft	1,375.35	412,605.00
3	23/17	Shrouding with graded pea gravel 3/8" to 1/8" (10 to 3 mm), around tubewell in bore hole (according to dia) complete in all respects		500.00	Cft	214.50	107,250.00
4	16/15a	Supply and dumping at site, including handling of materials within three chains (90 m). Different size As a media filter. a) stone or boulder					
		a.	24" thick 12" to 16" size	248.93	Cft	64.57	16,072.94
		b.	24" thick 6" to 8" size	809.93	Cft	64.57	52,295.59
		c.	18" thick Pebble size $1_{1/2}$"	186.70	Cft	64.57	12,054.71
Total Amount							**686,672.08**

1. Aquafer Wells Type 01 (02 Nos) (Non MRs)

1	N/MRS	Supply and Filling Harrow Sand (Course Sand) all as spd	124.47	Cft		
2	N/MRS	Supply and Fixing of strainer /blind UPVC pipe 18" dia in the well all as spd. Or as directed by the Engineer	300.00	Rft		
3	N/MRS	Providing and installing P.V.C. Bail/End plug, in tubewell bore hole:- B.S.S. Class `B' 18" i/d	2.00	Each		
Total Amount Non MRS						

PUNJAB INDUSTRIAL ESTATES DEVELOPMENT AND MANAGEMENT COMPANY (PIEDMC)

REHABLITATION OF AQUAFER WELLS AT SUNDAR INDUSTRIAL ESTATE

Bill of Quantities (BOQ)

2. Aquafer Wells Type 02 (26 Nos)

Sr. no	MRS ref	Description	Qty	Unit	Rate (Rs.)	Amount (Rs.)
Schedule Items						
1		Excavation in foundation of building, bridges and other structures, including dagbelling, dressing, refilling in layers around structure with 17.1 to 17.5 excavated earth, watering and ramming lead 'upto one chain (30 m) and lift upto 5 ft. (1.5 m).				
	3/21/1/a/ii	Depth upto 5ft (1.5m) By Manual ii) in ordinary soil.	6,688.50	Cft	17.09	114,294.43
	3/21/2/a/ii	Depth from 5.1 ft (1.5m) to 15 ft (4.5 m):	3,785.69	Cft	13.53	51,213.58
2	23/2a	Direct Rotary/ Reverse Rotary drilling of bore for tubewells, in all types of soil except shingle, gravel and rock:- a) from ground level to 250 ft. (75 m) below ground level:-				
		h) 15" to 18"	4,017.00	Rft	956.30	3,841,457.10
3	23/8a(vi)	Providing and installing, P.V.C. strainer B.S.S. Class 'B', in tubewell bore hole, including sockets and solvents, etc. complete:-				
		f) 10" i/d (250 mm)	1,874.60	Rft	1,691.80	3,171,448.28
4	23/13a(vi)	Providing and installing P.V.C. blind pipe, B.S.S. Class `B', in tubewell bore hole, including sockets and solvents and jointing with strainer, etc. complete.				
		f) 10" i/d (250 mm)	2,142.40	Rft	2,413.25	5,170,146.80
5	23/11a(vi)	Providing and installing P.V.C. Bail/End plug, in tubewell bore hole:- a) B.S.S. Class `B'				
		vi) 10" i/d (250 mm)	26.78	Each	782.35	20,951.33
6	23/17	Shrouding with graded pea gravel 3/8" to 1/8" (10 to 3 mm), around tubewell in bore hole (according to dia) complete in all respects	5,200.00	Cft	214.50	1,115,400.00
7	Ch 7 Item # 7i	Pacca brick work other than building upto 10ft. i) cement, sand mortar:- ratio 1:4	2,270.41	Cft	456.13	1,035,602.52

8	11/9b	Cement plaster 1:4 upto 20' (6.00 m) height:- b) ½" (13 mm) thick	2,018.14	Sft	50.06	101,035.19
9	10/4.	Providing, laying, watering and ramming brick or stone ballast 1½" to 2"(40 mm to 50 mm) gauge mixed with 25% sand, for floor foundation, complete in all respect	436.97	Cft	147.49	64,450.34
10	6/5f.	Providing and laying of Cement concrete plain including placing compacti ng, finishing and curing complete (including screening and washing of stone aggregate):(f) Rati o 1: 2:4	560.24	Cft	519.90	291,263.38
11	25/9+11	Small iron work, such as gusset plates, knees, bends stirrups, straps, rings, etc. including cutting, drilling, riveting, handling, assembling and fixing; Erection and fitting in position iron trusses, staging of water tanks, etc.				
		Iron angle / clamp for support 1-1/2 x 1-1/2 x 12 SWG	873.40	Kg	414.87	362,345.42
12	1/1.	Carriage of 100 Cft. (2.83 cu.m) of all materials like stone aggregate, spawl, kankar lime (unslaked), surkhi, etc. or 150 Cft. (4.25 cu.m) of timber, by truck or by any other means owned by the contractor. From Sargoda	493.01	Cft	145.50	71,730.02
					Sub Total	**15,411,338.40**

Signature & Stamp of PIEDMC_____ Signature & Stamp of Contractor_____

\

SPECIFICATIONS-
TECHNICAL PROVISIONS
(Vol-III)
(Technical specification of MRS, issued by Finance Department Govt. of Punjab will be used)

PUNJAB INDUSTRIAL ESTATES DEVELOPMENT AND MANAGEMENT COMPANY (PIEDMC)

Bidding Documents

For

"REHABLITATION OF AQUAFER WELLS AT SUNDAR INDUSTRIAL ESTATE"

ITB # PIE/P&C/AW/BOM-SIE/26/12

TECHNICAL SPECIFICATIONS

VOLUME-III

October, 2026

TECHNICAL SPECIFICATIONS

1.0 GENERAL

1.01 This General Specification is to be taken as applying to all the works in this Contract. Figured dimensions on the working drawings shall be followed in preference to the scale.

1.02 Until and unless specified otherwise, all goods and materials are to be Pakistan manufactured and to be of the best quality, and where not otherwise specified shall be according to latest engineering practice and conforming to Pakistan Standards (P.S) or British Standard Specifications (B.S.S) or Standard of American Society of Testing Materials (ASTM). The Engineer or the Consultants may also supplement such specifications during the progress of work.

1.03 All materials and goods used for such and other items shall be subjected to standard testing and if found below the specified standard such as PS or BSS or ASTM or their equivalent shall be removed from the site immediately at Contractor's own expense. All testing of materials finished and unfinished, shall be carried out by the Contractor at his cost, in the presence of Engineer or Engineer or his Representative for which the Contractor shall maintain a reasonably well-equipped laboratory of his own, close to the site of work or make any other additional arrangement to the satisfaction and convenience of the Engineer. The Contractor shall include testing charges in his quotations and shall not be entitled to any reimbursement on this account for routine testing.

1.04 The Contractor must give early attention to the submission of samples of materials for approval of the Engineer, indicating the names of the manufacturing firms where applicable especially of cement, sand, aggregates, steel, water, tiles, hard-core and all fittings. Whenever practicable, samples shall be submitted at least three weeks before it is proposed to use the materials. Until and unless specified otherwise and whenever materials are ordered to be forwarded to a testing laboratory other than site laboratory for check/ testing, the Contractor will be reimbursed the cost of fees for such tests if proved satisfactory, by the Buyer. The Contractor, however, will be required to bear the cost of the fees for tests, which proved unsatisfactory.

1.05 The Contractor must take all steps necessary to prevent damage or interference with all supply lines such as water, electric power, fuel, telephones, drains, buried cables and any construction designed for the use of the public, government or semi government authorities or the Buyer. The Contractor shall be responsible for any damage caused to such services or constructions and settle all claims in respect of such damage.

1.06 The Contractor shall protect from injury by covering all work, internally and externally needing protection including new concrete, brickwork, surface renderings, floors, etc., to the satisfaction of the Engineer, including the work of his subcontractors at his own cost.

1.07 The whole work shall be carried out in the best manner in accordance with the instructions contained in these documents and those given by the Engineer from time to time during the progress of the work. The work shall be carried out in conformity with the best of the standard construction practices preferably the British Codes of Practices.

1.08 The Contractor shall submit to the Engineer for his approval before beginning the work, a complete plan of the proposed sequence and methods of operations for the execution of the works. Detailed drawings showing the location and construction of dumping and working platforms, cranes, building and all other structures in connection with the Contractor's plant and material storage sheds shall also be submitted to the Engineer for his approval before construction.

1.09 Orders and directions may be given orally by the Engineer or his Representative, and shall be received and promptly obeyed by the Contractor or his Representative or any superintendent or foreman or any supervisor of the Contractor whosoever may have charge of the particular part or section of work in relation to which the orders or directions are given, and a confirmation in writing of such order or directions will be given to the Contractor by the Engineer, if so requested. The Contractor shall provide and maintain at his own expense during the performance of the work an office in the vicinity of work. Orders or directions, written or oral, from the Engineer or his Representative delivered at such office shall be considered as delivered to the Contractor. The Contractor's office shall be fitted with a telephone connected to the local Telephone Exchange.

1.10 The Contractor shall not use the site for any other purpose than that of carrying out this Contract work. The operations of the Contractor shall be confined to the area immediately adjoining the buildings and the works included in this Contract but site clearance shall be kept to the satisfaction of the Engineer to permit carrying out of other works by other Contractors. The Contractor shall not affix advertisements; neither shall he permit advertisements to be displayed without the written consent of the Engineer.

1.11 The contract drawings are the working drawings to guide the Contractor generally about the shape and size of all the structures and fittings. Before proceeding to make preparations, fabrication, execution, erection of any such fittings and other details of any temporary works, scaffolds, railings, shuttering, details of doors, windows, partitions, iron mongers work, etc; the Contractor shall be under obligation to prepare and submit all detailed shop drawings to the satisfaction and the approval of the Engineer, before doing any or all of that described above or as directed. Approval of the contractor’s drawings shall not relieve the Contractor for any part of his obligation to meet all the requirements of the specifications or correctness of his drawings.

1.12 No cement work shall be permitted during extreme cold weather when unless otherwiseauthorized by the engineer.

1.13 PAYMENT

Contractor shall not be entitled to any separate or additional payment on account of all these general requirements and any other arrangement or action Contractor has to undertake under the direction of the Engineer for a proper carrying out of the works and meeting all obligations of the Contract.

2.0 SITE CLEARING, GRUBBING AND SETTING OUT OF WORKS

2.01 SCOPE OF WORK

The work covered by this section of specifications consist of furnishing all labour, necessary equipment, services, miscellaneous and necessary items required to

satisfactorily complete the clearing, grubbing and setting out of the works, as indicated on drawings, specified herein or both.

2.02 CLEARING

Clearing shall consist of cutting, or trimming of trees, if any, and the satisfactory disposal of tree and other vegetation designated for removal, together with the timber snags, bushes, and rubbish occurring within the area. Trees, other vegetation stumps, roots, and bushes in area to be cleared shall be cut off flush with or below the original ground surface except such individual trees, group of trees and vegetation as may be indicated on the drawing or designated by Engineer or his Representative to be left standing. Individual trees and other vegetation, to be left standing shall be thoroughly protected from damage during construction operation, by erection of barriers or by such other means as the circumstances require and as approved by the Engineer or his Representative. Clearing operation shall be conducted in a manner that existing structures and installations under construction, employees and others remain safe.

2.03 GRUBBING

Grubbing shall consist of the removal and disposal of all stumps, roots and matted roots in the designated grubbing areas. Stumps, roots, logs and timber and other debris, shall be excavated and removed to a depth not less than 2 feet below any subgrade level. In areas where the cut is over 3'-6" grubbing shall not be necessary.

2.04 DISPOSAL OF DEBRIS

Timber and other refuse to be disposed off by burning shall be burned at location, approved by the Engineer or his Representative, in a manner that will avoid all hazard such as damage to existing structures, construction in progress, trees and vegetation. The contractor shall be responsible for compliance with all pertinent laws and regulations pertaining to the burning of fire. Disposal by burning shall be kept under constant attendance, and residual, until materials will not be permitted to be pushed or placed on the adjacent areas without written approval of the owner/owners. The stones and concrete shall be broken and removed from the site for receiving the structure/flooring where required. All debris shall be disposed off by the Contractor as directed by the Engineer.

2.05 SETTING OUT OF WORKS

The Contractor shall set out the works and shall be responsible for true and perfect setting out of the same and for correctness of the direction, levels, dimension and alignment of all parts thereof.

If at any time any error in this respect shall appear during the progress of the works, the Contractor shall, at his own expense, rectify the error to the satisfaction of the Engineer. The Contractor shall construct accurate benchmarks sothat the lines and levels can easily be checked by the Engineer.

2.06 DRAINAGE DITCHES

The Contractor shall construct and maintain such ditches, in addition to those shown on

drawings or as may be ordered by the Engineer to adequately drain and areas under construction.

2.07 PAYMENT

Lump sum payment shall be made for the work covered in this section of the specification and all costs of site clearing and setting out shall be covered in the unit rates of the Contractor for this item.

3.0 EXCAVATION, FILLING, BACKFILLING AND DISPOSAL

3.01 SCOPE OF WORK

The work covered by this section of the Specifications consists of furnishing all Plant, Labour, Equipment, Appliances and materials and in performing all operations in connection with excavating, filling, backfilling and disposal for building construction, and other foundations complete in strict accordance with this section of the Specifications and the applicable drawings and subject to the terms and conditions of the Contract.

3.02 BORING LOG DATA

A preliminary report on Subsoil investigation and exploratory data of the site area is available for reference only in the office of the Engineer. The Buyer or Engineer's predications, regarding character or extent of soil or other subsurface conditions to be encountered during the work are not bounding on the Contractor. The Contractor shall make his own deductions for subsurface conditions which may affect methods or cost of constructions of the work hereunder and he shall make no claim whatsoever for damages or compensation, should he find conditions during the progress of the work, different from those indicated by the soil investigation report of Engineer.

3.03 EXCAVATION

(a) Classification

Excavation shall include the removal of all materials of every category and nature. If rock is encountered it shall be removed carefully and without excessive noise and vibration. Blasting shall not be resorted to without specific permission in writing from the Engineer.

(b) The excavation shall conform to the dimensions and elevations as indicated on the Drawings. Foundations on made up ground shall be taken down to natural

bottom soil as per direction and approval of the Engineer. Excavation shall extend a sufficient distance from walls and footings to allow for placing and removal of forms installation of services and for inspection but the same shall not be paid.

(c) In the event of any excavations being carried out wider or deeper than authorized, the same shall be filled in by the Contractor at his own cost to the required levels with lean concrete

if below footing or with properly compacted, local river sand if beneath slabs or as directed by the Engineer.

(d) Shoring and Bracing:

The Contractor shall provide at his own cost, where required all shoring walls, supports etc. to the sides of the excavation to prevent sliding or any movement; where necessary, excavated sides shall be sloped as directed by the Engineer.

(e) Dewatering and Drainage:

The Contractor shall control the grading in the vicinity of site of work in order to prevent any water from running into the excavated areas. He shall at his own cost keep dry all pits and trenches during construction and all de- watering and pumping out whether due to ground water seepage or otherwise, shall be included in the rates as quoted by the Contractor. The method employed in all cases shall be approved and agreed by the Engineer or his Representative.

(f) Protection of utility lines:

When any existing utility lines whether to be retained or be removed are encountered within the area of operations, the Contactor shall notify the Engineer and his Representative, and shall not proceed until necessary measures are taken for protection or removal of the lines and instructions are obtained from the Engineer.

(g) Excess and undesirable material:

Excess and undesirable material from excavation not required for fill or backfill of the building site, shall be disposed off, removed and/or deposited as for filling and levelled anywhere on the work site as directed by the Engineer. Earth suitable and meant for backfill shall be stored at site in a manner not to interfere with the progress of construction works.

3.04 FILL AND BACKFILL

Where concrete slabs are to be placed on the ground, any loam, organic and other unsuitable material shall be removed. Fill where required to raise the subgrade for concrete slabs shall be clean, unadulterated local river sand or gravel and shall be free from wood, stones and other debris. Excavated material shall only be used for fill if approved by the Engineer in writing. All the backfill behind the subgrade walls shall be done with clean local river sand or approved excavated soil. Fill shall be compacted up to 95% modified AASHTO Density by a Power vibratory roller, mechanical rammer, or other approved equipment, in layers not more than 6 inch thick. Each layer shall be uniformly spread, watered to the extent of optimum moisture requirement for the required degree of compaction and then compacted. Contractor shall arrange at his own cost the testing of the filling where required by the Engineer or his Representative, after completion of foundation footings, walls, slabs and other construction below the elevation of the final grades and prior to backfilling. Backfill shall be placed in horizontal layers not more than 6 inches thick and shall have proper moisture content for the required degree of compaction of 95%. Each layer shall be compacted by mechanical tampers or by other suitable equipment approved by the Engineer. Backfill shall be brought to a suitable elevation above grade to provide for anticipated settlement and shrinkage thereof. Backfill shall not be placed against foundation, walls etc., prior to the damp proofing treatment, if specified and approved by the Engineer or his Representative. Backfill shall be brought up evenly on each side walls as far as practicable. Heavy equipment for spreading and compacting backfill shall not be operated closer to the wall than distance equal to the

height of the backfill above the top of footing.

3.05 COMPACTION:

Fill and/or backfill within the building or structures and for a distance of 6 ft. outside structures shall be compacted to a density of not less than 95% maximum density at optimum moisture

content.

3.06 ROUGH GRADING:

(a) Necessary rough grading shall be carried out by the Contractor to establish grade or

construction requirements of the site. Grades not otherwise indicated shall be uniform levels or slopes between points on existing and finished grades. Abrupt changes in slopes shall be rounded. Additional fill required to complete rough grading shall be provided as directed by the Engineer or his Representative.

(b) Where paving or slabs are specified, all rough grading shall be done to the subgrade of the base course, removing all large stones and debris and shall be compacted uniform to the correct lines and levels ready to receive the paving or slab. Refilling, where required shall be executed with suitable selected materials in layers not exceeding 6 inch thick and thoroughly compacted to the required density. In place density tests shall be carried out by the Contractor for the approval of the compaction by the Engineer.

3.07 FOOTING BOTTOM LEVELS:

The levels as noted in the Drawings are only approximate and must be adjusted in the field with the approval of Engineer, depending on the soil conditions encountered. No concreting shall begin until the soil bearing capacity is substantiated by visual inspection by the Engineer or his Representative. The Contractor in planning his work shall make arrangement and provisions to construct the lowest level footings first.

3.08 FIELD LEVELS:

Prior to starting the work, the Contractor shall arrange to take the levels of the piece of land on which the building is located as directed by the Engineer. The same shall be simultaneously checked by the Engineer or his Representative and shall form the basis of payments for excavation and filling etc.

3.09 DISPOSAL OF SURPLUS EARTH AND RUBBISH:

All surplus earth and rubbish shall be disposed off at site as directed by the Engineer. Disposal of surplus earth and rubbish can only be carried out in timings allowed by the local authorities. The term disposal shall include all operations of loading, unloading, stacking, spreading, re-handling, filling in depressions, including consolidating and ramming in layers not exceeding 6 inch thickness.

3.10 MEASUREMENTS AND PAYMENTS:

All excavation shall be measured net and perpendicular and no allowance shall be made for any increase in bulk of the excavated material after excavation or for sloping sides, or widened trenches to accommodate formwork, shoring and bracing etc. Similarly the measurements for filling/backfilling shall be thoroughly compacted and measured net and no allowance shall be made for any increase in bulk after excavation. Excavation, filling and Disposal shall include all leads and lifts as specified elsewhere in these specifications. Payment for all the items under this section shall be made at the rates entered in the BOQ

appended to the contract and in accordance with the applicable conditions of the contract.

4.0 WATER

4.01 SCOPE:

The work covered by this section of the Specification consists of furnishing all labour, appliances and in performing all operations in connection with obtaining, conveying and storing water at site of work.

4.02 QUALITY OF WATER:

The water used for construction the contractor shall supply sufficient water for all purposes, including mixing the concrete, curing and cleaning plants and tools. Where doubt exists as to the suitability of the water, it shall be tested at the cost of the contractor in accordance with BS3148. Where water shall be shown to contain any organic impurities sugar or an excess of acid, alkali or salt or inorganic impurities in solution or suspension, the engineer shall refuse to permit its use. The suitability of water shall be subject to test when required by the engineer.

4.03 CHEMICAL REQUIREMENTS

As a guide, water may be used as mixing water if the chemical contents do not exceed the following limits, otherwise control test's to show the suitability have to be made.

Kinds of Ingredient Permissible Limits

Dissolved Solids 2,000 ppm

Alkali Carbonate and Bicarbonate 1,000 ppm

Chloride* 500 ppm

1,000 ppm

Sulphate (So4) 3,000 ppm

Alkalies (Na2O+0.658 K2O) 600 ppm

PH - Value 4 (min)

* The maximum concentration of chloride in prestressed concrete should not be higher than 500 ppm.

In general, for reinforcement concrete in moist environment, or concrete containing imbedded aluminum structures with dissimilar metals, a maximum concentration of 1000 ppm is acceptable.

If the result of the acceptance tests are within 90% of the permissible limits, the quality control tests for above impurities shall be down each month, of not otherwise directed by the engineer.

If the amounts of each chemical ingredient are lower than specified in the section, and trial mixes show that no harmful effects appear due to the subject tested, the water can be used as mixing water.

4.04 TEMPORARY STORAGE TANK:

The Contractor shall provide onsite at his own cost temporary storage water tank with all necessary G.I. Pipes and fittings as per instructions of the Engineer. No separate payment will be made for tank, pipes and accessories, etc. These tanks shall be removed or dismantled or demolished and the area shall be cleaned and made good on completion of work as per direction of Engineer.

4.05 PAYMENT:

No separate payment will be made for the work covered under this section, and all costs in connection therewith shall be deemed to be included in the unit rates

6.0 STEEL REINFORCEMENT

6.01 SCOPE OF WORK:

The work covered by the section of the specification consists of furnishing all materials, tools, labour, equipment & appliances and in performing all operations in connection with the providing, straightening, cutting, bending, binding, fixing, elsewhere with necessary overlaps, wastage including binding wire, chairs, pins, spacer block complete in strict accordance with this section of the Specifications, the applicable drawings, approved bar bending schedule according to BS-4466 and the terms and conditions of the Contract. All steel reinforcement should be placed at locations, to lines and level as shown in the drawings and as the directed by the Engineer.

6.02 MATERIALS:

6.2.1 Reinforcing steel to be new billet stock of mild steel (plain bar), hard grade (deformed bar) and Ribbed Tor steel as specified on the drawings and shall conform to British Standard Specifications or equivalent ASTM or Pakistan Standard.

6.2.2 The Contractor shall furnish to the Engineer's Representative Manufacturers' mills certificate to guarantee that steel meets the standard, specifications requirements and minimum certified yield stresses as follows:-

i) Mild Steel plain bars conforming to B.S.S. 4449 or PS-231

a) Tensile Strength: 438 to 517 N/Sq.mm (63.5 to 75 Kips/Sq. in).

b) Yield Strength : 250 N/Sq. mm (36 Kips/Sq. in)

c) Elongation : 16% to 24% (average 20%).

ii) Hot rolled deformed bars conforming to ASTM A-615 Grade 60 or PS-605

a) Tensile Strength :560 N/Sq. mm (81 Kips/Sq. in).

b) Yield Strength : 415 N/Sq. mm (60 Kips/Sq. in).

c) Elongation : 11%

6.2.3 All steel to be true to the Standard Specifications with regard to bend ability specially the hard grade deformed bars under 19 mm (3/4") dia. shall be capable of being bent cold through 90 degree round a bar of four times its own diameter without fractures or injury of any kind. In case of deformed bars over 19 mm (3/4") dia. and under 28 mm (1-1/8") dia. round a bar of 6 times its own diameter.

6.2.4 18 gauge galvanized wire shall be used for binding the steel reinforcement.

6.03 TESTING:

Reinforcement shall be obtained only from manufacturers approved by the Engineer or his Representative. All reinforcement shall be tested according to ASTM standard. If and when required samples shall be tested for above specification in an approved laboratory when required by the Engineer or his Representative and all costs of such tests shall be borne by the Contractor is a minimum three (03) samples will be tasted per twenty (20) ton of steel.

6.04 STORAGE

Reinforcing bars shall be stored on platforms above surface of ground and be free from scales, oil, structural defects prior to placement in works. Rusted or dirty steel bars shall not be used in the works unless brushed and cleaned by proper steel wire brushes and after being approved for use by the Engineer or his Representative.

6.05 REINFORCEMENT CUTTING AND PLACING

6.5.1 All reinforcement steel shall be cut and bent cold in strict accordance with bar bending schedules approved and drawings supplied by Engineer. The Contractor shall prepare bar bending schedule from approved structural working drawings conform to ACI 318-02 section 12.5. The bending schedules shall be drawn on approved forms and submitted to the Engineer or his Representative for checking and approval. The steel reinforcement shall be cut and bent to sizes as per drawings and approved bending schedules. In case any bars, cut, bent or even fixed in position are found incorrect in dimensions size or shape according to the requirements of the drawings and instructions of Engineer, the Contractor shall replace such steel bars cut bent or fixed in position by correct sized bars at his own cost and no extra payment shall be made to the Contractor on such account. The system of holding bars in place shall ensure that all steel in top section will support weight of workmen without displacement or distortion. Suitable spacers and chairs as approved by the Engineer or his Representative shall be used for supporting and spacing purposes of bars. In case any bars are bent or displaced they shall be straightened or replaced prior to pouring. ll reinforcement bars within the limit of a day's pour shall be in place and firmly tied with 18 gauge G.I. wires. Bars with kinks or bends not shown on drawings shall not be used.

6.5.2 Where indicated in the drawings, mesh shall be of the sizes as shown on drawings and conform to British Standard B.S.785. Mesh reinforcement when used in slabs shall be supported at proper elevations by standard accessories. In slabs on ground, pre cast concrete blocks may be substituted for chairs.

6.06 LAPS AND SPLICES

6.6.1 No splicing of bars shall be allowed at position other than shown on the drawings. All lap lengths shall be of the minimum sizes as indicated on the drawings or in conform to ACI-318-02 section 12.5 and in no case shall lap length be less than 40 times the diameter of the bigger lapping bars for nominal M.S. bars. Hard grade bars and tor steel shall have laps of 50 times the bigger diameter of lapping bars. Splices of adjacent bars shall be staggered unless approved otherwise by the Engineer or his Representative.

6.6.2 All reinforcing steel fixed in position shall be inspected by the Engineers Representative and no concrete shall be poured until steel placement has been approved by the Engineers Representative. For inspection purposes the Contractor shall give to the Engineers Representative reasonable notice before the scheduled pouring time. Clear concrete cover to reinforcement steel shall be as indicated on the drawings/specified.

6.07 MANUFACTURE

Steel shall be manufactured from prime Pakistan Steel billets or equivalent quality approved.

6.08 MEASUREMENT AND PAYMENT

6.8.1 The quantity to be paid for shall be the calculated in theoretical number of metric ton of reinforcement steel bars or mesh as determined from the approved bar bending diagrams and incorporated in the concrete and accepted, except when reinforcement is paid for under other items.

6.8.2 The weight of plain or deformed bars will be computed from the theoretical weight of plain round bars of the same nominal size as shown in the following tabulation:

Size Inch	Weight in		Size Inch	Weight in	
	Lbs / ft.	Kg. / ft.		Lbs / ft.	Kg / ft.
¼	0.167	0.076	¾	1.502	0.681
3/8	0.376	0.170	7/8	2.044	0.927
½	0.668	0.303	1	2.672	1.212
5/8`	1.043	0.473	1-1/18	3.382	1.534

6.8.3 Clips, ties, separators, and other material used for positioning and fastening the reinforcement in place, and structural steel, shall not be included in the weight calculated for payment under this item. If bars are substituted upon the Contractor's request and as a result more steel is used than specified only the amount specified shall be included.

6.8.4 When laps are made for splices, other than those shown on the drawings or required by the Engineer and for the convenience of the Contractor, the extra steel shall not be measured nor paid for.

6.8.5 When continuous bars are shown on the drawings, without the splices being shown, the necessary steel in the splices will be paid for on the basis of the individual bars not being shorter than 40 ft (12 m).

6.8.6 The accepted quantity measured as provided above shall be paid for at the contract unit price for the items listed in the Bill of Quantities, which price and payment shall be full compensation for furnishing materials, labour, equipment and incidentals necessary to complete the item.

7.0 BRICK WORK

7.01 SCOPE

The work under this section includes First Class brick work in wails, both internal and external of any thickness and of the heights shown on the drawings. The brick work shall be carried out in cement sand mortar of proportion specified in the Bill of Quantities.

7.02 CONFORMITY TO %V.P. SPECIFICATIONS VOL. PART I AND IT

Except as otherwise specified, all brickwork shall be erected in conformity with

West Pakistan Schedule of Rates Volume I Part II Section 21.1 “Brick Work General “as applicable to the work shown on the drawings and as specified.

7.03 Materials

7.3.1 Brick shall he first class, strong and sound of well burnt clay, uniform in shape, colour and shall measure 220x105x67 mm with dimensional tolerance of l.6nun so that every four courses laid shall measure 305mm in height. Bricks should produce a ringing sound when struck. The brick shall be free from flaws, cracks, chip stones, nodules of lime or kankar or other blemishes. The brick shall not absorb more than l/6th its weight when soaked in water for an hour. Minimum compressive strength shall not be less than 140kg/sq.cm. Bricks of only one size shall be used throughout the work and bricks from different kilns not having the same size shall not be allowed. All the bricks shall, conform to W.P. Specifications Vol. I, Part I14o.4.1 for First Class Burnt Clay Bricks.

7.3.2 Mortar for Brick Work

a. Mortar shall be mixed in proportion as specified in Bill of Quantities and shall be done by volume except directed ‘otherwise by the Engineer.

b. Cement and sand shall be thoroughly mixed in a dry state on a hard platform or in a trough & appropriate quantity of water shall be a to make the mortar of workable consistency.

The mortar in any single batch shall be of quantity which could be used within 30 minutes of mixing water. Such mortar which has not been used within 30 minutes Of addition of water shall be discarded. The mixing platform or, trough shall be thoroughly, washed and cleaned at the close of the day's' work.

c. Portland cement shall conform to BS: 12.1958.

d. Sand shall be as specified under section" Concrete Work".

e. Water shall be clean, free from any organic impure &-. ties, acids, alkaline, greasy or oily substances, either in solution or in suspension as specified under section "Concrete Work".

7.3.3 Wall Ties

Mild steel bars, wall ties, lugs, anchors etc. shall be provided as per drawing and instructions of the Engineer.

7.04 SAMPLES

The samples of 'all the material used for brick work shall be approved by the Buyer after necessary testing. The Contractor shall incorporate in the work only approved materials during the work in progress. If the Engineer, desires to get the material tested, this will be got done by the Contractor from a Laboratory approved by the Engineer at the Contractor's expenses.

7.05 WORKMANSHIP FOR BRICK WORK

7.5.1 Brick Laying:

Brick laying shall conform to the applicable requirements of W.P. Specifications Vol. 1, Part II. ll brick work shall be 'done with approved bricks and shall be strictly in accordance with the drawings. The bricks shall be laid in mortar specified in the Bill of Quantities. Before the bricks are used they shall be soaked in water tanks (to be constructed by the Contractor at his own cost) for at least four hours. They shall be placed in the water tanks in a manner that they do not get damaged.

7.5.2 Bricks shall always be laid in English bond (unless otherwise directed by the Consultants) with frogs upwards. Bricks shall be laid with bed and vertical Joints pa tilled with specified mortar. Brick work must be truly plumb and must be checked by plumb bob and straight 4dge frequently. Brick work should present a perfect straight and vertical surface and no chipping or rubbing shall be allowed. Brick work where necessitated by the d have curved or chamfer surface shall be cut and chiseled finely such as when placed in position they do not present an ugly look or require levelling up with extra mortar. Where work has to be left incomplete, it shall be left in slope and in no case the difference of height between different walls shall be more than 1.5 feet at any section of the building.

7.5.3 All brick work shall be bonded where it abuts oilier brick work, concrete walls and concrete columns. Where brick walls and partitions intersect or abut, it is absolutely necessary to interlock the masonry of the two walls in a way as not to leave a straight vertical joint between the two walls. In such cases the bond shall be obtained by placing

the closer 115mm from the face in every alternate course of the wall or masonry ties shall be provided. Where brick work abuts concrete, wall ties engaging in dovetail, slots shall beprovided at every fourth course. 76mm long brick course height shall be considered sufficient under these specifications, unless the Contractor considers continuous length of slots convenient for his working. %there 14.S.bar wall ties are shown on drawings; these shall supersede dovetail wall ties specified herein.

7.5.4 Brick work shall be wedged to the underside of floor and roof slabs and the top moat horizontal joints shall be, filled with mortar well compacted. Putlog holes shall always be along headers and not more than one brick in length and shall be neatly bricked I on removal of scaffolding. All the built-in items such as anchor bolts, inserts, pipe supports, hangers, pipe sleeves, dowels, ties and all items shown on the drawings or specified are required to be built into the masonry as the work progresses. Frames and other built-in work shall be maintained in their proper position and bracing shall not be removed until they are securely held in position by the masonry. The spaces around all built in items shall be filled with masonry. Where required for later' building in, opening in masonry for heating and plumbing pipes, electric conduits etc. shall be left, and after piping or conduits have been installed, filled around with brick work and mortar.

7.5.5 All cutting and patching of masonry required for installation of built in work or work supported by masonry shall be kept properly cured, for at least 10 dayswhere cement mortar is used. Where according to plans and sections the masonry work requires cut bricks to be used, the same shall be done by 'the Contractor free of cost, to obtain correct thickness according to drawings.

7.5.6 Jointing

Vertical joints in alternate course must be directly one over the other, horizontal joints shall be truly level. The thickness of joints shall be between 8mm to I3mm or as shown otherwise on the drawings. The thickness of joints must be kept uniform throughout the progress of work and varying sizes of joints shall not be allowed. The joints of the masonry must be raked out uniformly at the close of each day's work and any extra mortar sticking on the face of the work must be scrubbed out and cleaned daily.

7.06 MEASUREMENT AND PAYMENT

7.6. Brick work in wall having 230 mm thickness shall be measured in square meter i.e. multiplying the length or breadth of wall with height of the wall. 115 and 76 mm thick walls shall also be measured in square meter. All the openings left in masonry wall will be deducted. ll mild steel reinforcement shall be measured as specified in section "Concrete Work". The rate for items of work in this section shall include:

7.6.2 The cost of material, labour, curing, scaffolding and' appliances at site and all operations in connection with the installation of brick work in accordance with the drawings, finish schedules and as specified above, and cutting and patching work required for installation built in work.

8.0 PLASTERING

8.01 Scope of Work:

The work covered by this section of the Specifications consists of furnishing all plant, labour, appliances, and materials and in performing all operations in connection with the installation of plastering complete in strict accordance with this section of the Contract.

8.02 General

Except as may be otherwise shown on the drawings or specified elsewhere; the plaster surfaces shall include walls, partitions jambs, returns, reveals, backs of recesses and jambs and heads of windows and doors and all the soffits, alcoves etc.

8.03 Materials:

a) "WATER" as specified in respective section.

b) CEMENT" shall be ordinarily Portland cement and shall conform to B.S.S.12.

c) "SAND" shall be from approved source and free from dust and salt as specified in Section on concrete.

d) "METAL LATH" shall be expanded metal not less than 9" wide strips, and weighing at least2.5 lbs, per square yard or as directed by the Engineer.

e) "CORNER LATH" shall be strips 6" wide bent to form two 3-inches wings.

9. CONCRETE PAVEMENTS

9.1 DESCRIPTION

This work shall consist of a pavement composed of Portland cement concrete with or without reinforcement as specified constructed on a prepared subgrade or base course in accordance with these specifications and in conformity with the lines, grades, thickness and typical Cross-sections shown on the plans. Both plain and reinforced concrete shall include deformed bars for contraction joints and dowel bars for expansion joints or as shown on the Drawings.

9.2 MATERIAL REQUIREMENTS

9.2.1 Concrete

Concrete materials shall conform to the requirements indicated in item 401 and as specified hereinafter. In addition to it the contractor shall advise the Engineer immediately after the award of the contract of the source of all materials to be used in proportioning concrete for the work. If the contractor later proposes to obtain materials from a different source, he shall notify the Engineer at least thirty (30) days before such materials are to be used.

9.2.2 Reinforcing Steel

Concrete reinforcement shall conform to item 404 or as indicated on the Drawings. If required, steel fabric for reinforcement of concrete shall conform to AASHTO M 55-73. It must be supplied in sheets.

9.2.3 Polythene Sheeting

Polythene sheeting for placing immediately below concrete slabs shall be 0.065mm thick or having a minimum weight of fifty (50; grams per square meter (whichever is greater) made from polythene or other approved hydrocarbon thermoplastic resin (produced by the polymerization of ethylene under high pressure and density) and given an antistatic treatment to reduce dust attraction and reduce friction. The sheeting shall have the minimum mechanical properties shown in table as under:

PROPERTIES OF POLYTHENE SHEETING

Properties	Direction

Machine Transverse

Tensile Strength Method ASTM D882-73 Kgf/SM 140 105

Elongation at Break % 150 500

Tear Strength Elmendorf Method ASTM D689-62 (1974)-Kg/cm2 390 310

9.2.4 Joint Filler

Joint filler shall be of approved quality and consist of cane or other suitable long fibers of a cellular nature uniformly impregnated with asphalt. The asphalt content of the joint material shall be between thirty and fifty per cent. The joint material will not deteriorate under any weather conditions and is to be of such a character as not to be permanently deformed or broken by moderate twisting, bending or other ordinary handling. Strips of the joint filler which do not conform to the specified dimensions within the tolerance + two (2) mm for thickness and + twelve (12) mm for depth are to be rejected. All damaged strips are to be rejected too.

9.2.5 Joint Sealing Compound

Joint sealing compound is to be as BS 2499(1973) type A1 or A2, or as approved by the Engineer. The compound is to be impermeable, is to withstand all weather conditions and is to be capable of adhering to the concrete without cracking, spalling or disintegrating and will not require an impracticable condition of dryness or cleanliness of the concrete slabs.

Where recommended by the manufacturer of the sealing compound, a primer supplied by him is to be used to improve adhesion.

9.2.6 Dowel Bars

Dowel bars shall be cut from mild steel bars and will be approved by the Engineer. The Contractor's attention is directed to the requirement that one end of each dowel bar in all joints, except bonded construction joints, shall be sawn and not sheared so that no irregularities likely to interfere with, sliding action in the concrete shall occur. The minimum length of the dowel bars spaced at one meter center to center or as shown on the drawings, shall be thirty five (35) times the diameter of the bar used unless otherwise specified or as directed by the Engineer.

9.2.7 Expansion Caps

Expansion caps for dowel bars in expansion joints shall consist of pressed metal sleeves plugged at one end by punching the specified joint filler board of a wad of cotton waste of similar compressibility and sealed at the end against entry of mortar. The tube shall have an internal diameter permitting sliding on the dowel bar but close enough to prevent entry of mortar.

9.2.8 Darkening Agent

Darkening agent for the top course of concrete pavements if ordered and specified shall be carbon black; either as an aqueous dispersion containing at least 25% of solids, to be added to the mixing water, or as a self dispensing powder to be added to aggregate and cement. It shall be approved by the Engineer as non-deleterious giving grey colour and shall be added at the rate of 0. 1 % by weight of the mixed concrete or as specified by the manufacturer if it is aqueous dispersion. The minimum quantity of self dispersing powder shall be 0.025% by weight of the concrete aggregate.

The darkening agent shall be free from Sulphur trioxide and from any other matter deleterious to concrete. Crack inducing battens shall be of wood or of any other suitable material proposed by the Contractor at the time of tendering and approved of at the award

of the Contract or approved by the Engineer at his discretion after the award of the Contract. Battens of highly absorbent wood or other material shall be of cross-sectional dimensions shown on the Drawings, and treated to prevent adhesion between them and the concrete.

9.2.10 Sampling and Testing

All materials shall be approved by the Engineer prior to use in the work. Additional samples will be taken and tested by the Buyer during the progress of the work to check on the quality of the materials being supplied and/or placed by the Contractor. The results of these tests will be available for the Contractor's use, however they are not intended for construction control purpose. The contractor should set up his own test facilities or arrange the same from a private laboratory, to assure that his materials and workmanship comply with the specification.

9.3 CONSTRUCTION REQUIREMENTS

9.3.1 Pavement Base

The base upon which the concrete pavement is laid shall be levelled compacted and true to the grades and cross-sections shown on the plans and shall be so maintained, as provided under such other items throughout the period of placing concrete pavement. To ensure the proper depth and section, a, scratch template true to depth and section and resting on accurately set side forms shall be moved over the surface immediately before placing concrete, and any irregularities shall be immediately corrected. High spots shall be planned down and the Contractor shall have the option of either filling low spots to the proper elevation with approved material, which shall be watered compacted and struck off to the required grade or of placing additional concrete. No measurement or payment will be made for such additional concrete. Until the subgrade has been checked and approved, no material shall be deposited thereon. Storing or stock piling of materials on the subgrade and placing of surfacing material or laying of pavement on muddy or frozen subgrade will not be permitted.

9.3.2 Forms

Side forms shall be made of metal of an approved section and construction provided with adequate devices for secure setting so that when in place, they shall withstand the impact and vibration of the compacting and finishing equipment with settlement not exceeding 1.5 mm in three (3) meters form a true plane surface on the top of the form and inside face shall not vary more than six (6) millimeters from a plane surface. The width of the bases of steel forms shall be not less than their height except that the forms having a base not less than two third (2/3) of their height and meeting all other requirements herein may be used for manual laying of nonrectangular bays. The depth shall be equal to the thickness of the pavement at the edge or as shown on the plans. The forms sections shall be tightly joined by each joint free from play in any direction. These forms shall be stacked with steel stakes and shall be of a length approved by the Engineer. Each section of forms shall have stake pocket* at each end and at intervals of not more than one and one-half (1:5) meters between ends. Each section of forms shall be straight and free form bends and warps at all times. Side forms for machine placing 5hall have rolled section steel rails which shall be of adequate stiffness to carry the laying, compaction and finishing machines.

These machines shall not run on folded sheet metal form tops. The top faces of the forms

are to be carefully cleaned and maintained. The forms shall be without horizontal joints and with flange braces extending outward on the base not less than two thirds (2/3) the height of the forms. Each stack pocket shall be equipped with a positive non detachable wedge. These forms shall be placed by using at least three steel pins of the size and length approved by the Engineer or as shown on the plans. They shall be equipped with positive locking devices which will permit neat tight joints and do not, deform under impact vibration by trust. Pins for stacking forms in place shall be made of steel at least two (2) centimeters in diameter as directed by the Engineer in case of impractical use, Wooden forms may be used for curves having a radius of less than fifty (50) meters. They shall be made of two and half (2.5) centimeters well-seasoned surfaced planks fastened together and shall be attached securely to a wooden base in width. All wooden forms shall be braced at least every sixty (60) centimeters with steel pins of the size and length here in specified. Straight forms shall be set out as chords to convex edges and as tangents to concave edges, but payment will not be made for concrete outside the curved edges shown on the Drawings. Before placing forms the underlying material shall be excavated to the required grade, and shall be firm and compact. The forms shall have full bearings upon the foundation throughout their length and shall be placed with exactness to the required grade and alignment of the edge of the finished pavement. Forms shall be set to the required lines and grades well in advance of placing concrete, preferably not less than two hundred (200) meters, Forms shall not be removed for at least twelve (12) hours after the concrete has been placed. Forms shall be carefully removed in a manner to avoid damage to the pavement. Under no circumstances will the use of pry bars between the forms and the pavement be permitted. Pavement which in the opinion of the Engineer is damaged due to the careless removal of forms shall be repaved by the Contractor as directed by the Engineer at the Contractor's own expense.

Forms shall be thoroughly cleaned and oiled each time they are used.

Special forms or other supporting devices meeting the approval of the Engineer shall be used to support the joint filler at transverse control joints when concrete is to be placed on only one side of the filler When pavement is placed adjoining existing concrete pavement upon which the finishing machine will travel, any irregularities in the old pavement shall be ground down to a true uniform surface of sufficient width to accommodate the wheels of the finishing equipment if necessary to obtain proper smoothness of the pavement.

9.3.3 Composition and Compressive Strength of Concrete

9.3.3.1. Strength Requirement

(a) All concrete shall be proportioned by weighing and conform to the following strength and mix requirements

I. Minimum cylindrical compressive strength at 28 days: 280 kg/sq.cm.

II. Cement content, 50 Kg sacks:7-5 bags

III. Maximum water cement ratio: 0.45

IV. Slump range: 25-75 mm

V. Entrained air in percent: 3+0.6 %

VI. Nominal size of aggregate: 1/2" Max.

(b) At least 35 days prior to the start of paving operations and after approval of all materials to be used

in the concrete, the contractor shall submit for approval, the mix design he intends to use based on

proportioned weights of cement, air entrainment agent, saturated surface dry aggregates and water.
This mix design will be tested by the Engineer and approval will not be granted unless the average twenty-eight (28) days compressive strength exceeds the minimum strength requirement by at least 1-5-~nt. However the Engineer may allow paving operation on the basis of seven (7) days strength if he is satisfied with the results of seven (7) days strength.

(c) The cement content given in the foregoing table is the minimum. If it is not sufficient to produce concrete of the compressive strength specified it shall be increased as necessary without additional compensation under the contract.

(d) The compressive strength of the concrete will be determined by testing standard cylinders made from concrete taken from the mixer. The making, curing and testing of the specimens will be in accordance with AASHTO T23-73.

(e) During the course of construction, when the source of any material for the concrete is to be changed, or if there is any variation in the quality of the materials furnished, additional tests and necessary adjustments in the mix shall be made as required to obtain the specified strengths.

9.3.3.2 Composition

The required consistency of the concrete mixture shall be such that the mixture will be cohesive, uniform and plastic, permitting proper handling and finish. When deposited it shall not flow, but shall remain in a conical pile. There shall be minimum segregation and surplus water during the process of handling and finishing. The slump shall be determined by AASHTO T1 19-74 except that during the course of construction control of concrete may be accomplished by the ball penetration as outlined in AASHTO T183-72. Two and a half (2.5) centimeter ball penetration is considered equivalent to a slump of five (5) centimeters. The cement content shall be determined by means of a yield test in accordance With AASHTO T 121-74.

9.3.4 Placing Concrete

9.3.4.1 General

The mixer shall be operated outside of the forms at all times except at locations where the Engineer deems it not feasible to do so.

When ordered by the Engineer, the subgrade shall be moistened as directed, prior to the placement of the subgrade paper such as polythene sheeting.

Concrete mixed in central plant shall be transported without delay from the mixing plant to the position for laying and any concrete which in the opinion of Engineer has been mixed too long before reaching, the work will be rejected and shall be removed from the site. The concrete shall be deposited on the subgrade in successive batches for the full width between forms and in a manner which will require as little re handling as possible. Spreading shall be done by an approved mechanical spreader in *a manner that will prevent segregation and separation of the materials.

Necessary hand spreading shall be done with shovels, not rakes. Workmen shall not be allowed to walk in the freshly mixed concrete with boots or shoes coated with earth or foreign substances. The amount of material deposited shall be sufficiently in excess of that required to form the pavement to the required cross-section after consolidation in order to provide a roll of concrete ahead of the front screed of the finishing machine for the full length of the screed.

Concrete shall be thoroughly consolidated against and along the faces of all forms and along the full length and on both sides of all expansion joint assemblies by means of vibrators inserted in the concrete. Vibrators shall not be permitted to come in contact with a joint assembly, the grade or a side form. In no case shall the vibrator be operated longer than fifteen (15) seconds. Concrete shall be deposited as near td expansion and contraction joints as possible without disturbing then) but shall not be dumped from the discharge bucket or hopper on to a joint assembly. The hopper is well cantered on the joint assembly. Damage to joint assemblies caused by dumped concrete shall be repaired immediately as directed by the Engineer at Contractor's expense. Trucks delivering concrete shall not run-on polythene sheeting nor shall they run on, completed slabs until at least fourteen (14) days after placing the concrete.

Should any concrete materials fall on or be worked into the surface of completed slab, they shall be removed immediately by methods approved by the Engineer.

Placement of concrete ahead of the initial spreader strike off shall not be more than fifteen (15) minutes ahead of final spreader strike off. If concrete is placed in one (l) layer only, the placement of concrete shall not be more than twenty (20) minutes ahead of the spreader strike off.

In order to secure adequate compaction, the concrete is to be spread with a surcharge above the finished level of the layer. Spreading, compacting and finishing operations are to be completed without delay.

The total time taken from the addition of the water to the mix until the completion of the surface finishing operations shall not exceed thirty (30) minutes when the shade or mix temperature exceeds twenty-seven (27) degree C or forty (40) minutes when less than twenty-seven (27) degree C. The mixing and placing of the concrete shall progress only at such a rate as to permit proper finishing, protecting and curing of the pavement.

The additives shall be added to the concrete mix so as to ensure more setting time. The top of the forms shall be kept free from accumulation of concrete or foreign material. The Contractor shall not permit the accumulation of laitance along the edge of a slab poured adjacent to one previously placed. Any accumulation of laitance shall be removed and replaced with fresh concrete. As soon as the side forms are removed, the edges of the slab shall first be inspected by the Engineer and any minor honey combed areas shall then be filled in With mortar composed of one part of cement to two parts of fine aggregate under the supervision of the Engineer.

9.3.4.2 Weather Conditions

For concreting during hot/cold weather, requirements 401.3.6 (1) of these specifications will be followed.

9.3.6 Placing Reinforcement All pavement reinforcement shall be placed as shown on the plans. All marginal bars, dowel bars, and tie bars required by the plans shall be held in proper position by sufficient, number of metal bar supports or pins as approved by the Engineer. If the center joint is to be sawed in lieu of placing the metal center strip, the tie bars may be installed mechanically by means of equipment and methods approved by the Engineer. The satisfactory placement of the tie bars shall depend upon the ability of the mechanical device to place the tie bars in their true position- The Engineer may require, when satisfactory placement is not obtained by mechanical" means, that the tie bars be installed ahead of placing the concrete and that they be securely staked and tied if necessary to hold them in their exact position. The use of removable devices, supporting the bars from the forms, will not be permitted.

Following the placing of the concrete, it shall be struck off to conform to the cross section shown on the plans and to an elevation such that when the concrete is properly consolidated and finished, the surface of the pavement will be at the elevation shown on the plans. When reinforced concrete pavement is placed in two (2) layers, the entire width of the bottom layer shall be struck off to such length and depth that the sheet of fabric or bar mat may be laid full length on the concrete in its final position without further manipulation. The reinforcement shall then be placed directly upon the concrete after which the top layer of the concrete shall be placed, struck off and screed. Any position of the bottom layer of the concrete which has been placed more than thirty (30) minutes without being covered with the top layer shall be removed and replaced with freshlymixed concrete at the contractor's expense. Plain concrete and bar reinforced bridge approach pavement may be placed in one (1) layer.

Where two (2) layers of wire mesh reinforcement are required, such as bridge approaches, the bottom layer shall be supported in the required position with bar chairs. Separators shall be used for the top layer if the strike off cannot be properly used for the operation. Laps in adjustment sheets or mats of reinforcement shall be as shown on the plans. Laps parallel to the centerline of the pavement will not be permitted except for unusual widths of pavement lanes or for irregular areas. If the plans do not show dimensions for taps, the minimum lap either perpendicular or parallel of the centerline of the pavement shall be fifteen (15) centimeters. The adjacent sheets shall be fastened or tied together to hold all parts of the sheets in the same plane. Reinforcing steel shall be free from detrimental amounts of dirt, oil, paint, grease, loose mill scale, and loose or thick rust which could impair bond of the steel with the concrete.

9.3.7 Joints

Joints shall be constructed exactly in accordance with the details shown on the plans and specifications and with the best of workmanship. Failure to construct the joints as called for and in the best possible manner, as determined by the Engineer, will be cause for suspension of work until the cause of the defective work is remedied.

If removal of existing pavement of any type is required to connect with the new pavement, and the termination of the removal is not at an existing joint, the new joint shall be made-by sawing the existing pavement not less than five (5) centimeters deep before removal.

9.3.7.1 Expansion Joints

The subgrade at Expansion joints shall be accurately trimmed to the required cross section and to the proper depth of the pavement.

A string line shall be stretched between the pavement forms along the centerline of the joint. One half of the length of each dowel bar shall be painted in accordance with the directions shown on the plans and then thoroughly coated with hard grease, or lubricant as approved by the Engineer, to prevent the concrete from bonding to that portion of the dowel.

The entire joint assembly shall be of a type designated on the plans and shall be installed in such a position that the centerline of the joint assembly is perpendicular to the centerline of the pavement slab and the dowels lie parallel to the centerline of the slab. Finished joints shall not deviate more than six (6) millimeters in the horizontal alignment from a straight line. No plugs of concrete shall be permitted anywhere within the expansion space.

A slip sleeve of the dimensions shown on the plans shall be placed on the greased end of each dowel. The greased ends shall be free to slide in the dowel holder andshall extend in the direction as indicated on the plans. Any excess grease on the dowel holder shall be removed.

The joint shall be securely staked or fastened in place prior to placing the concrete and in a manner to ensure the joint and the dowel bars will remain in their proper position after the concreting and finishing operations are completed.

Joints for pavement designed for two (2) or less lanes of traffic shall be assembled and installed in one (1) continuous piece or the connections between sections shall be made rigid and tight to prevent offsets in sections of the joints. The length of individual pieces of the expansion joint filter shall be not less than the width of one (1) traffic lane of the pavement.

The finishing machine shall be operated in a manner that 011 prevent displacement of the joint. If for any reason it is necessary to straighten a joint, any depression caused by this operation shall immediately be filled with fresh concrete, reshaped and brought to the original crown in advance of the longitudinal finishers. Any fluid laitance or mortar caused by this operation shall be removed and replaced with fresh concrete.

As the finishing machine approaches the joint on the first trip, the excess concrete shall be shoveled ahead and the tamper and each screed, in turn, shall be lifted over the joint. On the second trip of the finishing machine, the screed may be operated over the joint.

9.3.7.2 Contraction Joints

Contraction joints shall be of the type and dimensions and at the spacing shown on the plans. Sawed contraction joints shall be cut by means of an approved concrete saw. The joints shall not be sawed until the concrete has hardened to the extent that tearing and reveling is precluded. All joints shall be sawed during the initial curing period and the sawing shall begin before the pavement starts shrinking and uncontrolled cracking takes place. Any procedure which results in premature and uncontrolled cracking shall be revised immediately by adjusting the sequence of cutting the joints or the time interval involved between the placing of the concrete or removal of the curing media and the cutting of the joints. In no case shall the pavement be left overnight without having the joints sawed.

The joints shall be sawed at the depth, spacing, and lines shown on the plans. Guidelines or devices approved by the Engineer shall be provided to ensure cutting the joint in a straight line and perpendicular to the centerline of the pavement. The dust resulting from sawing shall be completely removed from the joint and adjacent areas by means of an air jet or a combination of air and water applied under pressure immediately after the joint has been cut, and before filling with joint compound.

When the plan so specifies that the dowels be installed through contraction joints; the subgrade at the contraction joints shall be accurately trimmed to the required cross section and to the proper depth of the pavement. A string line shall be stretched between the pavement forms along the center line of the joint. Each dowel shall be painted and thoroughly coated with hard grease or lubricant, in accordance with the direction shown on the plans or as approved by the Engineer, to prevent the concrete from bonding to that portion of the dowel. The entire joint assembly shall be of the type designated on the plans and shall be installed in such a position that the centerline of the joint assembly is perpendicular to the centerline of the slab and the dowels lie parallel to the slab surface as well as to the centerline of the slab. The greased ends of the dowels shall be placed in the direction as indicated on the plans and shall be free to slide in the dowel holder. Any excess hard grease on the dowel holder shall be removed.

9.3.7.3 Longitudinal Joints

Longitudinal joints shall be constructed in conformance with the details shown on the plans. When the fabricated steel strip is specified, it shall be held rigidly in place with an adequate number of pins driven into the subgrade to ensure that it will remain true to line and grade during concreting and finishing operations. On multiple lane pavements, where longitudinal joints are constructed at the form line, an approved recessed form and tie bars will be required. The full depth fabricated steel strip designated for other longitudinal joints will not be permitted. When sawed joints are specified or used, suitable guidelines or devices shall be furnished to ensure cutting the longitudinal joint on the true lines as shown on the plans. The sawing of longitudinal joints shall be performed at a time that will preclude erratic or uncontrolled cracking. Sawed joints shall be filled with the type of joint compound indicated on the plans. The dust resulting from sawing shall be completely removed from the joint and adjacent areas by means of air jet or a combination of air and water applied under pressure immediately after the joint has been cut and before filling with joint compound.

9.3.7.4 Construction Joints

A butt construction joint shall be made perpendicular to the centerline of the pavement at the close of each day's work and also when the process of depositing concrete is stopped for a length of time such that, in the opinion of the Engineer, the concrete will have taken its initial set. This joint shall be formed by using a clean plank header having a nominal thickness of five (5) centimeters, a width of not less than the thickness of the pavement and a length of not less than the width of the pavement. The header shall be cut true to the crown of the finished pavement and shall be accurately set and held in place in a plane at right angles to centerline and perpendicular to the surface of the pavement.

The top surface of the header shall be protected with steel as approved by the Engineer. On the face along with the center of the header there shall be fastened a trapezoidal piece of metal or wood the full length of the header, five (5) centimeters wide and at least twenty five (25) millimeters in depth to form a grooved joint. The header shall have drilled holes to accommodate the dowel or tie bars hereinafter specified. Upon resumption of Work any surplus concrete remaining upon the subgrade shall be removed. The header shall then be carefully removed and fresh concrete deposited against the old in such a manner as to avoid injury to the edge of the old concrete. The fresh concrete shall be vibrated into the groove in a manner to ensure an interlocking joint. Dowel bars or load transfer devices shall be used in all construction joints in accordance with the details shown on the plans. If no such details are shown on the plans, tie bars as provided for the longitudinal joint, and spaced at forty-five (45) centimeter centers, shall be placed across the joint in a plane parallel to the surface of the pavement approximately midway between the top and bottom surfaces of the pavement. The edges of the joint shall be grooved, edged, and sealed with the material used for sealing expansion and contraction joints.

No construction joint shall be placed within three (3) meters of an expansion, contraction, or other construction joint.

9.3.7.4 Sealing Joints

a) Materials: Joints shall be sealed with material of the approved type designated on the plans.

b) Hot Poured Joints: The joints shall be sawed as provided in sub item 310.33(b) and

covered as provided in sub item 310.3.7(c). After the fourteen (14) or seventeen (17) day curing period for the pavement has elapsed, the jute or other protective covering shall be removed from the joint and the joint thoroughly cleaned of all loose scale, saw dust, dirt, laitance or other matter. Cleaning may be accomplished with a compressed air jet, water under pressure, wire brushes or in extreme cases the joint shall, when directed by the Engineer, be re-sawn to ensure a completely clean joint. The joint surfaces and adjacent areas of the slab shall be thoroughly clean.

The hot poured joint material shall be heated in a heating unit approved by the Engineer to the temperature within the range required as shown by tests. The- joint shall be filled from the bottom of the saw cut to the surface of the pavement. Any joint with a depth greater than twenty five (25) millimeters shall be filled with a minimum of two (2) layers, each layer being approximately equal in depth.

c) Cold Poured Joints: The joints shall be sawed as provided in sub~ item 310.3.7(b) & 310.3.7(c) and cleaned of all loose saw dust, laitance, dirt, other foreign matter and free water. The joints shall be filled immediately after cleaning. The nozzle used must be so designed that the joint is filled completely from bottom to top. The joint shall be filled so it is rounded on top about six (6) millimeters above the pavement surface. Immediately after the joints have been filled, they shall be covered with strip of non-absorptive paper at least four (4) centimeters wide. Eleven (11) kilogram glass line or heavy craft is suitable. The paper shall remain on the joint until it weathers or wears off.

d) Permanent Header Board

Immediately after the forms are removed from the ends of concrete pavement that will be exposed to other than permanent type surfacing and temporary and permanent traffic, a header board having dimensions of not less than eight 18) centimeters (nominal) by twenty (20) centimeters shall be bolted securely to the end of the pavement in a manner to protect the edge of the pavement from damage. The header board shall extend the full roadway width, but may be in two (2) sections.

At the time of placing the concrete , six (6) (three for each lane), thirteen (13) millimeters by twenty (20) centimeters bolts shall be embedded in the end of the pavement in a. manner that Will hold the header board securely. The header board shall be shaped to conform to the crown of the pavement and shall be installed flush with the concrete pavement surface. The finishing and installing of the header board shall be considered subsidiary Work pertaining to the other items in the Bill of Quantities and will not be paid for directly.

The header will not be required on concrete base course Work.

9.3.8 Consolidating and Finishing

After being spread and struck off as provided in sub item 310.3.5 "Placing Concrete," the concrete shall be further struck off and consolidated with an approved finishing machine to such an elevation that when finishing operations are completed, the surface will conform to the required grade and crown. The finishing machine shall operate over the entire surface at least twice, the first time with the finishing machine tamper and both screeds in operation. A uniform roll of concrete approximately fifteen (15) centimeters above the pavement grade shall be maintained ahead of the front screed for its entire length during the first trip over with the finishing machine. Excessive tamping or finishing resulting in bringing an excess of mortar to the surface will not be permitted.

After the last pass of the finishing machine, a mechanical longitudinal finisher shall be operated over the concrete surface. The forward motion of the longitudinal finisher shall be so adjusted that the screed will pass over each portion of the surface at least twice. The

longitudinal finisher shall be operated in a manner that will prevent excessive slumping of the concrete at the form lines or the metal center strip or the loss of the crown of the pavement. If necessary or when ordered by the Engineer, the finisher shall be operated in one direction only or shall be operated from only the form to the centerline in order to ensure that the proper cross section of the pavement is obtained. The leading edge of the screed shall clear the forms upon completion of each transverse pass in order to clear the pavement surface of any laitance or thin mortar.

In general, the addition of superficial water to the surface of the concrete to assist in finishing operations will not be permitted. If the application of water to the surface is permitted by the Engineer, it shall be applied as a fog spray by means of approved spray equipment.

As an alternative to the longitudinal finisher, the contractor may use a machine composed of a cutting and smoothing float, or floats, suspended from and guided by a rigid frame. The frame shall be carried by four (4) or more visible wheels riding on, and constantly in contact with, the side forms.

When directed by the Engineer, following one of the preceding methods of longitudinal finishing, long handled floats having blades not less than one and one half (1.5) meters in length and fifteen (15) centimeters in width shall be used to smooth and fill in open textured areas in the pavement, Long handled floats shall not be used to float the entire surface of the pavement in lieu of, or supplementing, one of the preceding methods of longitudinal finishing.

When the longitudinal finishing has been completed, the entire surface shall be tested with straightedges not less than three (3) meters in length. The straightedges shall be operated parallel to the pavement centerline starting at the center and progressing toward the forms. Advance along the pavement shall be in successive stages of not more than one half (112) the length of the straightedges. All laitance, surplus water, and inert material shall be removed from the surface. All high places shall be worked down and all low places filled by combined operations of floats and straight edges until no irregularities exist. The proper crown of the pavement shall be maintained throughout the operations.

After floating and straightening has been completed, the concrete shall be finished by using a belt made of canvas, rubber, or other approved belting not less than fifteen (15) centimeters in width, nor less than sixty (60) centimeters longer than the width of the pavement. This belt shall be

worked with a longitudinal and crosswise motion. Care shall be exercised in the use of the belt to ensure that the edges of the belt do not dig into the surface of the concrete or work the crown out of the pavq4nent. Either machine belting or hand belting will be permitted.

As soon as all excess moisture has disappeared, and while the concrete is still plastic enough to make a granular surface possible, a drag shall be used which shall consist of a seamless strip of damp burlap or cotton fabric, which shall produce a uniform surface of gritty texture after dragging it longitudinally along the full width of pavement,. For pavement (5) meters or more in width, the drag shall be such that a strip or burlap or fabric at least one and one half (1.5) meters wide is in contact with the full width of pavement surface while the drag is used. The drag shall be maintained in such condition that the resulting surface is of uniform appearance and reasonably, free from grooves over two (2) millimeters in depth, as determined by the Engineer. Drags shall be maintained clean and free from encrusted mortar. Drags that cannot be cleaned shall be discarded and new drags substituted.

After dragging the surface with burlap, the concrete over the expansion joint filler shall be completely removed and the joint finished. The edges of the concrete at expansion joints shall be finished with a straight edge to the radius shown on the plans. The exposed edge of the pavement shall be finished with a straight edger to a radius of six (6)

millimeters. Any tool marks appearing on the stab adjacent to the joints or edge of slab shall be eliminated by dragging the surface. In doing this, the rounding of the corner of the slab shall not be disturbed.

9.3.8.1 Hand Finishing

Unless otherwise specified, hand finishing methods will not be permitted except under the following conditions:

a. In the event of breakdown of the mechanical equipment, hand methods may be used to finish the concrete already deposited on the grade when the breakdown occurs, and no additional concrete shall be placed until such equipment is repaired to the satisfaction of the Engineer.

b. Narrow widths Or areas of irregular dimensions where operation of mechanical equipment is impractical as determined by the Engineer, may be finished by approved hand methods.

c. Short lengths of pavement, such as bridge approach pavement, where the operation of mechanical equipment is impractical may be finished by approved hand methods. Concrete, as soon as placed, shall be struck off and screed done. An approved portable screed shall be used. A second screed shall be provided for striking off the bottom layer of concrete if reinforcement is used.

The screed for the surface shall be at least one (1) meter longer than the maximum width of the slab to be struck off. It shall be of approved design, sufficiently rigid to retain its shape, and be constructed either of metal or other suitable material shod with metal.

Consolidation shall be attained by the use of a suitable vibrator or other approved equipment.

In operation the screed shall be moved forward on the forms with a combined longitudinal and transverse shearing motion, moving always in the direction in which the work is progressing and so manipulated that neither end is raised from the side forms during the striking off process. If necessary, this shall be repeated until the surface is of uniform texture, true to grade and cross section, and free from porous areas.

After the concrete has been struck off, it shall be further smoothed, trued, and consolidated by means of a longitudinal float. The hand operated longitudinal float shall be not less than three and one-half (3.5) meters in length and fifteen (15) centimeters in width, properly stiffened to prevent flexing and warping. The longitudinal float, operated from foot bridges resting on the side forms and spanning but not touching the concrete, shall be worked with a sawing motion, while held in a floating position parallel to the road centerline, and passing gradually from one side of the pavement to the other, Movement ahead along the centerline of the pavement shall be in successive advances of not more than one half (112) the length of the float. Any excess water or soupy material shall be wasted over the side forms on each pass.

At the option of the Engineer, the long handled floats having blades not less than one and one half (1.5) meters in length and fifteen (15) centimeters in width may be substituted for the hand operated longitudinal float.

All other operations after this substitution for the mechanical equipment shall be performed in the manner previously described.

Concreting operation shall be performed only in daylight, under no circumstances shall concrete pavement placed or finished at night.

9.3.9 Removing Forms

Unless otherwise provided, forms shall not be removed from freshly placed concrete until it has set for at least twelve (12) hours, except auxiliary forms used temporarily in widened areas. F2rms shall be removed carefully so as to avoid damage to the pavement. After the forms have been removed, the sides of the slab shall be cured as specified for the surface. Major honeycombed areas will be considered as defective work and shall be removed and replaced at the Contractor's expense, as directed by the Engineer. Any area or section so removed shall neither be less than three (3) meters in length nor the full width of lane involved. When it is necessary to remove and replace a section of pavement, any remaining portion of the slab adjacent to the joints that is less than three (3) meters in length, shall also be removed and replaced.

9.3.10 Protecting and Curing of Concrete Pavement

a. Initial Curing

As the surface of the newly laid pavement is progressively finished, the initial curing and protection operations shall be started. Upon completion the finishing operation and while the surface of concrete is still moist, but no free water remains, a liquid curing membrane approved by the Engineer shall be applied to the exposed surface of the pavement at the rate not less than one (1) liter per three and two thirds (3-2/3) square meters of surface area when mechanical pressure distributors are used. The curing membrane, except on irregular areas, shall be applied by means of approved self-propelled mechanical pressure distributors or approved hand sprays. Satisfactory means shall be provided for thoroughly mixing the curing membrane compound before and during its use. The mechanical spraying equipment may be either a full width spray bar equipped with multiple nozzles or a traversing spray which travels from one edge of the pavement to the other. In either case the path of adjacent nozzles or passes of the traversing spray shall overlap a minimum of one-half (112) the width of the spray pattern so that all portions of the surface shall receive double applications from adjacent nozzles or passes. The pumping, pressure and distribution arrangement shall be correlated with the forward speed to provide adequate and uniform coverage of the pavement at not less than the minimum rate required. Irregular areas to which the mechanical distributor cannot be adapted may be covered with hand sprays.

When hand sprays are used, the curing membrane shall be applied in two (2) applications, each at a rate of not less than one (1) liter per five (5) square meters of surface area so as to provide a total rate of application of one (1) liter per two and one half (2-112) square meters of surface area. The path of the spray on the second application shall be at right angles to the path of the spray on the first application. When hand operated sprays are permitted, the equipment supplying the pressure to them. Spray nozzle shall be capable of supplying a constant and uniform pressure to provide uniform and adequate distribution of the curing membrane compound at the rate required. If from any cause, such as rainfall soon after its application, the curing membrane is damaged, the Contractor shall immediately apply another application of curing membrane to the surface of the pavement. The rate of application for the replacement membrane shall be the same as for the original membrane.

Unless otherwise directed by the Engineer, immediately following the application of curing membrane, an approved shade canvas shall be placed approximately thirty (30) centimeters above the pavement surface. The shade canvas shall be constructed of materials and in a manner approved by the Engineer. In no case shall any portion of the shade canvas come in contact with the pavement. The initial curing shall be continued for a period of twenty-four (24) hours from the time the curing membrane is applied.

When forms are removed, whether during the initial or the final curing period, the edges

of the pavement shall receive curing membrane at the rate of coverage specified for the pavement surface.

The curing membrane may be applied to the vertical edges of the pavement by means of hand sprays or by nozzles attached to the mechanical distributor, but the edges of the pavement shall be covered with curing membrane at the rate specified within thirty (30) minutes after removal of the forms.

When cold poured joint compound is used, all joints shall be sawed during the initial curing period. The shade canvas may be moved at joint locations for short periods of time to permit the sawing. Before being sealed, the joints shall be thoroughly cleaned of all loose saw dust, laitance, dirt, other foreign matter, and free of water. As the method of final curing is different from that of the initial curing, the cleaning and sealing of joints shall be performed immediately following the removal of the shade canvas at the end of the initial curing period and prior to the application of the polyethylene sheeting.

When hot poured joint compound is used, the joints shall be sawed, cleaned, and filled with jute or other acceptable protective material in the same time sequence as for cold poured joints. In no case shall any portion of the concrete pavement be exposed to the direct rays of the sun for more than one (1) hour.

Following jointing operations, curing membrane shall be applied to the joint area at the rate specified for the pavement surface.

b. Final Curing

Upon completion of the initial curing period and after the shade canvas has been removed and jointing operation has been completed, the pavement shall be completely covered with White Opaque Polyethylene Film as specified in AASHTO M 171. Adjoining sheets shall be lapped a minimum of forty-five (45) centimeters. The sheeting shall be held in place in a manner approved by the Engineer.

Final curing shall be continued until the concrete reaches an age of fourteen (14) days. During this period, the curing membrane and polyethylene film shall be protected from damage from any cause. Any damage from one cause shall be immediately repaired by the Contractor at his expense. No traffic, including workmen and pedestrians, shall be allowed on the surface of the pavement until the expiration of the fourteen (14) day curing period. When concrete is being placed during the time that the air temperature may be expected to drop below fifteen (15) degrees C, a sufficient supply of burlap, straw, hay, or other suitable blanketing material shall be provided along the work to protect the concrete and maintain a minimum temperature of fifteen (15) degrees C in the concrete as measured on the surface of the pavement. An approved moisture barrier such as wet burlap or plastic sheeting shall be placed on the concrete prior to placing the blanketing material. This type of cure shall be maintained for a period of seventy two (72) hours as the initial cure. After the initial cure as specified above, a final cure as specified above may be used. The final cure shall be maintained for a period of fourteen (14) days, thus making a seventeen (17) day curing period for cold weather concreting.

9.3.11 Surface Tolerance

As soon as the concrete has hardened sufficiently, the pavement surface shall be tested with a three (3) meter straightedge or other specified devices. Areas showing high spots of more than three 3 mm, but not exceeding twelve 12 mm in three (3) meters between any two contact points, shall be marked and immediately grinded down with an approved grinding tool to a tolerance of less than three (3) mm as described above.

Where the departure from correct cross section exceeds twelve 12 mm, the pavement shall be removed and replaced by the Contractor at his expense. Any area or section so removed shall neither be less than three (3) meters in length nor the full width of the lane involved. When it is necessary to remove and replace a section of pavement, any remaining portion

of the slab adjacent to the joints that is less than three (3) meters in length, shall also be removed and replaced.

9.3.12 Tests for Thickness of Pavement and Degree of Compaction

a. Thickness of Pavement

The Buyer will not be liable for payment of any excess in thickness of depth of pavement. During the progress of the work, the thickness or depth of pavement will be determined by the Engineer from cores cut from the concrete pavement by the Contractor. The cost of cutting and recovering all the cores described in this clause and the following paragraph shall be deemed to be included in the rates and prices for Portland Cement Concrete Pavement entered by the Contractor in the Bill of Quantities.

Unsatisfactory work shall be repaired, replaced, or will be paid for at an adjusted price, as follows:

1) One 15cm diameter core will be removed by the Contractor from each lane, at such locations as the Engineer may direct, and shall represent not more than 1000 SM of pavement area. A lane shall be considered the pavement surface between longitudinal joints, or a longitudinal joint and pavement edge.

2) If any core measurement is deficient more than 6.5 mm from the required thickness a core measurement shall be taken at each 30m interval in both directions longitudinal from the first deficient core in the same lane, as defined herein, until the thickness of the pavement is found to be not more than 6.5 mm deficient from the required thickness. Each deficient core shall be considered as representing the condition in the same lane or longitudinal section, as above defined, for a distance of 15m, in each direction longitudinally from the core.

3) Sections of pavement which are deficient in thickness, as determined by cores, by an amount more than 1.3 cm shall be removed and replaced with pavement of the specified thickness at the expense of the Contractor. The removal and replacement shall start at the determined point of deficiency and proceed longitudinally as hereinafter specified, until the pavement is to be not more than 6.5 mm deficient from the required thickness. The old reinforcing steel shall be left extended a sufficient distance so as to allow the new reinforcement steel to be lapped with the old, the required distance to be welded to the satisfaction of the Engineer.

4) The removal and replacements of pavements shall extend transversely the full width each lane in which such deficiency is found.

5) All pavements within two (2) meters of the deficiency spot shall be removed, except that when any joint is more than two (2) meters, all pavements shall then be removed to the next joint.

6) Sections of pavement which are deficient in thickness, as determined by measurement of cores in accordance with AASHTO T148-49, by an amount more than 6.5 mm, but not more than 1.3 cm, will be paid for at an adjusted price as specified in Table Below:

DEFICIENCY IN THICKNESS AS DETERMINED FROM CORES

Proportional Part of Contract of

Thickness Deficient Contract Price to be allowed

3.00 mm to 6.5 mm	95%
6.5 mm to 13 mm	75%

b. Degree of Compaction

The cores that have been cut from the concrete pavement according to the requirements of (i) above shall be examined by the Engineer's Representative to check the degree of compaction achieved through the slab and to check the effectiveness of the bond between the top and bottom course concrete.

Should any core reveal that any part of the slab has not been adequately compacted by revealing honeycombed or segregated concrete and should the bond between the top and bottom layers of concrete be such that a plane of weakness. is present, then additional cores shall be taken to check the areas of defective concrete pavement according to the procedure laid down in (i) above for determining the areas of concrete pavement deficient in compaction.

Any areas of defective pavement concrete so found shall be replaced with new concrete in accordance with this section at contractor's own expense.

The Engineer reserves the right to carry out crushing tests on any or all of the concrete cores taken in accordance with this clause, and should these tests show that any area of pavement concrete has failed to meet the strength requirements of the specification, then such areas of concrete shall be removed and replaced with new concrete, mixed, laid, compacted and finished to the requirements of this section at contractor's own expense.

c. Refilling, of Holes

Holes in the pavement created by the cutting of cores shall be thoroughly coated on the inside with a neat cement grout and shall then be filled with concrete of the same mix as shown in the pavement. The filling shall be in two equal layers and each shall be vibrated to its full depth. The surface shall be finished flush and brushed, the surface shall be kept thoroughly wet for 72 hours thereafter.

9.3.13 Replacement of Defective Concrete

Any concrete not complying with the specification shall be cut out and replaced in accordance With the specification over the full width of the slab between longitudinal construction joints and over a length extending between two transverse joints each of a type other than a warping joint.

9.3.14 Concrete Lug Anchors

"Concrete Lug Anchors" shall be constructed in accordance with the dimensions and notes and at the locations shown on the plans. Unless otherwise indicated on the plans, the class, composition, consistency, proportioning, batching, mixing and curing of the concrete used in concrete lug anchors shall conform to the same requirements as the concrete pavement. Reinforcing steel, concrete and excavation for lug anchors shall be subsidiary to the Bill of Quantities itern.0Concrete

Lug Anchors."

9.4 MEASUREMENT AND PAYMENT

9.4.1 Measurement

The unit of measurement for payment shall be the cubic meters of the completed and accepted Portland Cement Concrete Pavement, as measured in place. The number of cubic meters of the completed Portland Cement Concrete Pavement shall be determined by the length measured along the center line and upon the surface of the road, times the width as shown on the Drawings plus the areas of any widening on curves, turnouts and intersection, authorized and measured separately. Measurement of pavement thickness will be ensured by erecting shutters for spreading concrete at required level.

The unit of measurement for bridge Approach Slabs shall be the square meters of the area actually constructed in accordance with the Drawings or as directed in writing by the Engineer.

Concrete Lug Anchors shall be measured by the linear meters in place, the measuring being made along the centerline of the concrete lug anchor transverse to the pavement centerline. No measurement will be made of unauthorized areas or for extra thickness.

9.4.2 Payment

The number of cubic meters of Portland Cement Concrete Pavement, measured as specified in sub item 310.4.1 above , will be paid for , at the price tendered per cubic meter in the Bill of Quantities, adjusted as specified for deficiency in thickness, which price shall include the cost of constructing, finishing, curing, protecting and cleaning the pavement as above described; the preparation of subgrade to receive the pavement; the construction of all joints of whatever type; cutting of cores and filling of holes, all materials, including joint filler and other material, equipment, labour and all else necessary therefore, and all other work in connection therewith and incidental there to in accordance with the specification and Drawings. Reinforcing steel shall be measured separately under relative items of work.

The number of cubic meters of Bridge Approach Slabs, will be paid for at the price tendered per cubic meter in the Bill of Quantities, which price shall include the cost of constructing, finishing, curing, protecting and cleaning the slab as above described; the surface preparation of the subbase to receive the slab: the construction of all joints of whatever type; all materials, including joint filler and other joint material, equipment, labour and all else necessary therefore, and all other work in connection therewith and incidental thereto in accordance with the Specification and Drawings.

Item Number	Description	Unit of Measurement
9 a	Plain Concrete Pavement	CM
9 b	Reinforced Concrete Pavement	CM
9 c	Concrete Lug Anchors	Meters

10. CONCRETE CURBS, GUTTERS AND CHANNELS

10.1 DESCRIPTION

This work shall consist of Curb, gutter, channel, or combination of Curb and gutter or channel; constructed of the following materials and in accordance with the specifications at the location and of the form, dimensions and designs shown on the Drawings or as

directed by the Engineer. The Curb, gutter, channel or in combination may be constructed by one of the following methods.

1. Cast in place concrete Curbing.
2. Precast concrete Curbing.
3. Extruded concrete Curbing.

10.2 MATERIAL REQUIREMENTS

The concrete cast-in-place for concrete Curbs, gutters and channels shall be either Class W or class 'C' or as indicated on the Drawings or as approved by the Engineer and shall conform to the requirements of that particular class prescribed under item 401.1.1 "Classes of concrete". An air entraining agent, if required, shall be added during mixing an amount to produce five (5) to eight (8) percent air by volume in the mixed concrete.

Precast concrete curbing units shall consist of class 'C' concrete conforming to the requirement of item 401 and to lengths, shape and other details shown on the Drawings. Curbing which shows surface irregularities of more than five (5) mm when checked with three meter straight edge or surface pits more than fifteen (15) mm in diameter will be rejected.

Forms to hold the concrete shall be built and set in place as described under item 403-Formwork. Forms for at least sixty meters of Curb or combination of Curb and gutter or channels shall be in place and checked for alignment and grade before concrete is placed. Curved sections shall have forms of either wood or metal and shall be accurately shaped to radius of curvature shown on the Drawings. Steel Reinforcement if required shall conform to item 404 "Steel Reinforcement".

Expansion joint filler shall be either the performed type conforming to requirement of AASHTO-M 153 or shall be precast fiber board packing. Joint filler shall consist of one part cement and two parts of approved sand with sufficient quantity of water necessary to obtain the required consistency. The mortar shall be used within thirty (30) minutes after preparation.

The Bonding compound when used shall conform to AASHTO M-200.

10.3 CONSTRUCTION REQUIREMENTS

10.3.1 Cast in Place

a. Excavation and Bedding

Excavation shall be made to the required depth and the base upon which the Curb or combination of Curb and gutter is to be set shall be compacted to a minimum density of ninety (90) percent of the maximum dry density as determined by AASHTO T-191 Method. All soft and unsuitable material shall be removed and replaced with suitable material acceptable to the Engineer.

Where directed by the Engineer, a layer of cinders or clean sand and gravel, or other approved porous material having a minimum compacted thickness, of fifteen (15) cm shall be placed to form a bed for the Curb or combination of Curb and gutter.

b. Placing Concrete

Concrete may be placed in the gutter to the full depth required. The top of the Curb or combination of Curb and gutter shall be floated smooth and the edges rounded to the radii shown on the Drawings. Before finishing, the surface of the gutter shall be tested with a three (3) meter straight edge and any irregularities of more than five (5) mm in three (3) meters shall be eliminated. In finishing concrete only mortar normally present in the concrete shall be permitted for finishing. The use of a separate mortar finishing coat or the practice of working dry cement into the surface of the concrete will not be permitted.

c. Joints

The Curb and gutter shall be constructed in uniform sections of not more than twenty five (25) meters in length except where shorter sections are required to coincide with the location of weakened planes or contraction joints of the concrete pavement or for closures but no section shall be less than two (2) meters long.

The sections shall be separated by sheet templates set perpendicular to the face and top of the Curb and gutter. The templates shall be approximately five (5) mm in thickness, of the same width as that of the Curb or gutter and not less than five (5) cm greater than the depth of the Curb or gutter. Templates shall be set carefully and held firmly during the placing of concrete and shall be allowed to remain in place until the concrete has set sufficiently to hold its shape, but shall be removed while the forms are still in place.

When pre-cut fiber board packing is used in the expansion joints it may be used in place of the sheet template referred to above, on the approval of the Engineer. In this case the fiber board shall be pre-cut to the shape of Curb so that its outer edge is flushed with the abutting Curb.

Expansion joints shall be formed in the Curb and gutter at intervals of six (6) to ten (10) meters in order to coincide with the expansion joints of cement concrete pavement or as shown on the Drawing.

d. Dowels at Expansion Joints in Channels At expansion joints in channels and in the channel portion of Curbs and channel built monolithically, painted dowel bars with slip sleeve shall be provided as a load transfer medium at locations shown on the Drawings.

The size and spacing of the dowel bars shall be as indicated on the Drawings. Each dowel shall be set accurately parallel to the top surface of the gutter and accurately at right angles to the expansion joint.

e. Contraction Joints

Transverse contraction joints shall be provided opposite to all contraction joints in abutting concrete pavement and other locations shown on the Drawing spaced to a maximum of four (4) meters.

The contraction joints shall be provided by forming grooves in the face and surface of structure at right angle to the Curb alignment and Curb surface. The grooves shall be rectangular in cross-section, five (5) cm deep by five (5) cm wide. The grooves shall be formed in the top of all Curbs and in the exposed roadway face of Curb and in the channel surface of monolithic type Curb and channels and in the surface of channels. The edges of the joints shall be tooled and the joints shall be left clean, neat and of specified width and depth.

f. Removal of Forms and Finishing

The forms shall be removed within twenty four (24) hours after concrete has placed except that the, form used against the face of the Curb in a combination of Curb and gutter shall

be removed as soon as the concrete has set sufficiently to hold its shape. Minor defects shall be repaired with mortar containing one part of Portland cement and two parts of the fine aggregate. Plastering shall not be permitted on the face of a Curb or Curb and gutter and all rejected Curb or gutter shall be removed and replaced without additional compensation. All surfaces which will be exposed in the finished construction of the Curb and gutter shall be finished, while the concrete is still "green" by wetting a wood block of float and rubbing the surface until they are smooth.

g. Curing

During seventy two (72) hours following placing of concrete, the Curbs, channels and gutters shall be protected against premature drying by covering with suitable cotton or Hessian mats and by frequent sprinkling with water, with liquid forming compounds or with waterproof paper or by any other method as mentioned in section 401.3.8-Curing, Concrete and approved by the Engineer.

h. Backfilling

After forms has been removed and concrete has been cured as specified, the excavation of Curbs, gutters or channels shall be backfilled with suitable earth or granular material tamped into place in layers of not more than fifteen (15) cm each until firm and solid.

10.3.2 Precast

a. Excavation and Bedding

Excavation shall be made to the required depth as shown on the Drawings. All soft and unsuitable material shall be removed and replaced with a suitable material acceptable to the Engineer. Bedding shall consist of Class B Concrete conforming to the requirements of Item 401 and shall be to the section and dimension shown on the Drawings.

b. Placing

The precast concrete Curbs shall be set in 1:3 of cement sand mortar to the line, level and grade as shown on the Drawings or as directed by the Engineer.

c. Joints

Joints between consecutive Curbs shall be three (3) to five (5) mm wide and filled with cement mortar to the full section of the Curb.

d. Backfilling

Backfilling shall meet the requirements of Item 601.3.1 (h).

DRAWINGS
(Vol-IV)

PUNJAB INDUSTRIAL ESTATES DEVELOPMENT AND MANAGEMENT COMPANY (PIEDMC)

Bidding Documents

For

"REHABLITATION OF AQUAFER WELLS AT SUNDAR INDUSTRIAL ESTATE"

ITB # PIE/P&C/AW/BOM-SIE/26/12

Drawings
Vol-IV

October, 2026

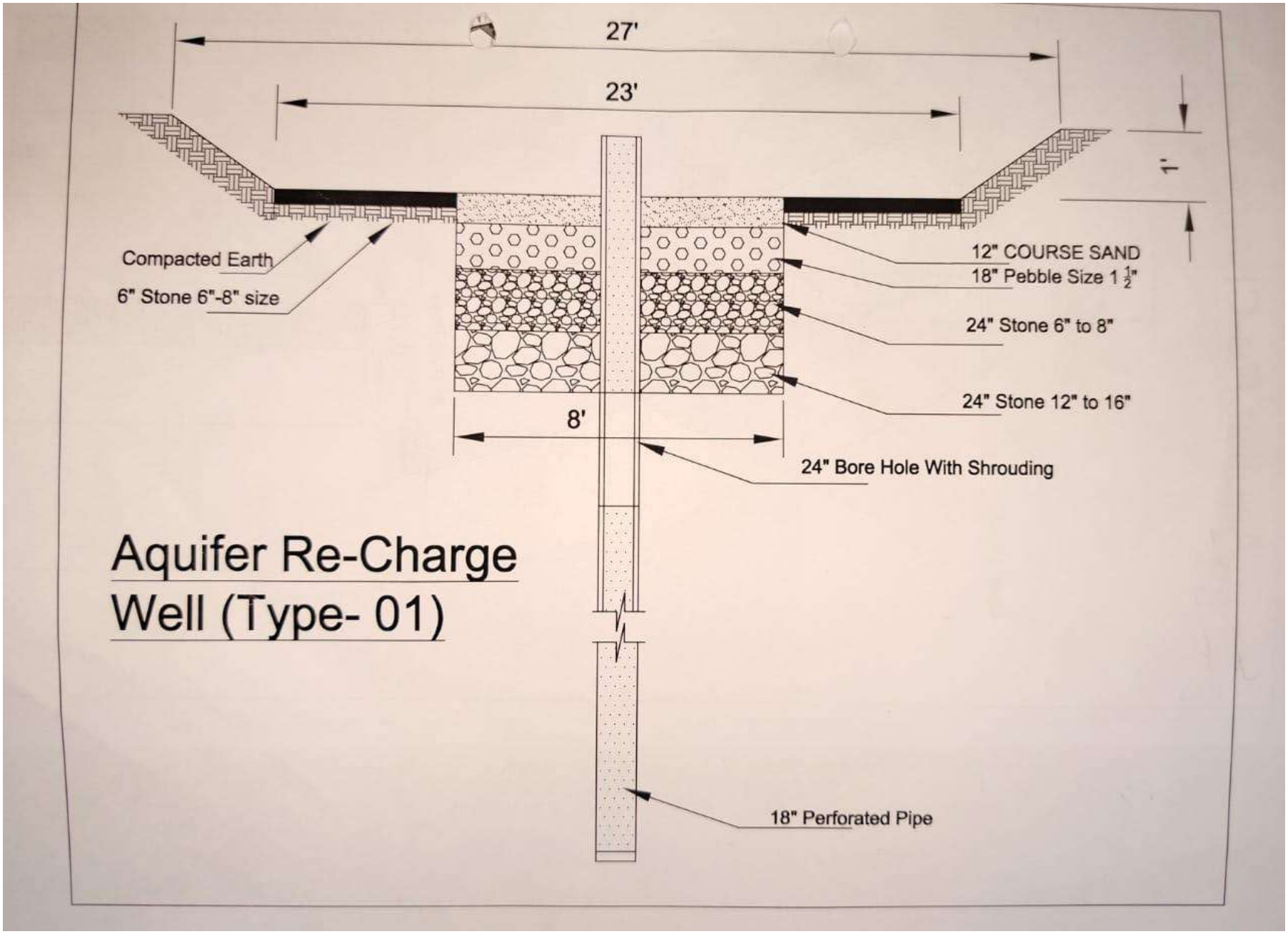
27'
23'
1'
8'
Compacted Earth
6" Stone 6"-8" size
12" COURSE SAND
18" Pebble Size 1 ½"
24" Stone 6" to 8"
24" Stone 12" to 16"
24" Bore Hole With Shrouding
18" Perforated Pipe
Aquifer Re-Charge
Well (Type- 01)

Aquifer Re-Charge Well- (Type-02)

Top View

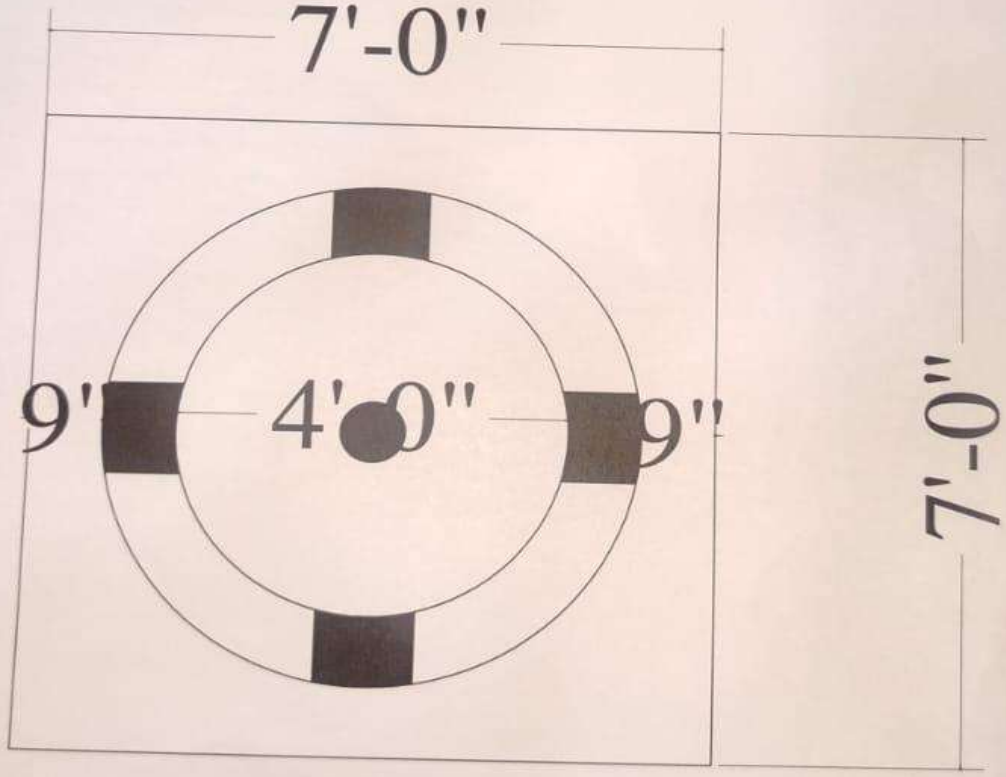

Aquifer Re-Charge Well- (Type-02)

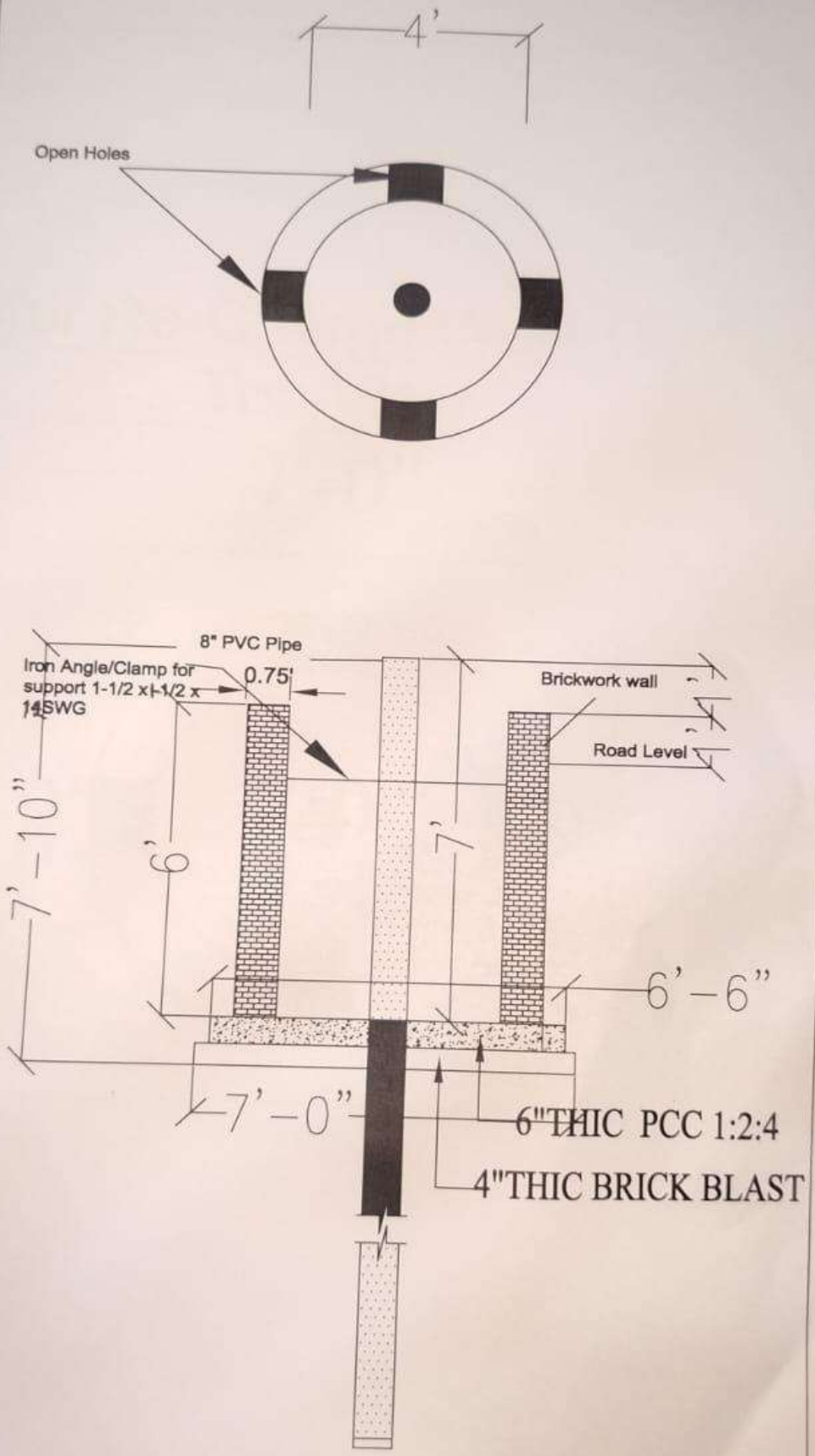

LIST OF CONTRACT DOCUMENTS

Sr. No.	Name of the Document	Status
(1)	Standard Form of Bidding Documents (Civil Works) *(to be used for estimated value of more than Rs. 22 Millions)*	Completed
(2)	Standard Form of Bidding Documents for Procurement of Works (E&M) *(to be used for estimated value of more than Rs. 22 Millions)*	Completed
(3)	Standard Form of Bidding Documents for Procurement of Works (For Smaller Contracts) *(to be used for all type of procurement for estimated value of not more than Rs. 25 Millions)*	Completed
(4)	Standard Form of Contract for Engineering Consultancy Services (For Large Projects) – Time Based Assignments *(to be used for consultancy fee over Rs. 2 Millions)*	Completed
(5)	Standard Form of Contract for Engineering Consultancy Services (For Large Projects) – Lump Sum Assignments *(to be used for consultancy fee over Rs. 2 Millions)*	Completed
(6)	Standard Form of Contract For Engineering Consultancy Services (For Smaller Projects) *(to be used for consultancy fee not more than Rs. 2 Millions)*	Completed
(7)	Standard Procedure for Pre-qualifications of Constructors	Completed
(8)	Standard Procedure for Evaluation of Bids for Procurement of Works	Completed
(9)	Standard Procedure for Pre-qualifications of Consultants	Completed
(10)	Standard Procedure for Evaluation of Proposals for Procurement of Engineering Services	Completed
(11)	Standard Procedure and Formula for Price Adjustment	Completed
(12)	Conciliation and Arbitration	Completed
(13)	Standard Form of Bidding Documents for Procurement of Works on BOT Basis	Completed
(14)	Standard Form of Bidding Documents for Procurement of Works on Design and Build Basis	Completed
(15)	Standard Form of Bidding Documents for Procurement of Civil Works (Single Stage Two Envelopes-SSTE)	Completed
(16)	Standard Form of Joint Venture /Consortium Agreements and Memorandum of Understandings.	Completed